ALTRA INDUSTRIAL MOTION

Air Motors

Huco® Dynatork

An Altra Industrial Motion Company

The Case for Piston Air Motors

Electric motors – the choice is phenomenal. At the heavyweight end of the scale they drive ships. Unbelievably one of the smallest electric motors ever produced operates by shuttling atoms between two metal droplets, one large and one small, residing on the back of a carbon nanotube through which an electric current is transmitted.

AC / DC, brush and brushless, servo and stepper; the list goes on. And then there's how they are powered – from the mains, the sun, battery, clockwork or via generator. With all these options one could easily ask: "Why do we need any other type of motor?" But, there is a motor that has found its niche and continues to grow in popularity. It's the Air Motor.

For applications such as paint-stirring the air motor has become an industry standard and when you consider its credentials it's easy to understand why. Other markets also understand the benefits of air motors, so under what circumstances would you choose air over electric?

The first and obvious answer is when other power sources are not suitable for the application. Hazardous areas are clearly prime sites for air motors as there is no danger of sparks. Of course there are ATEX-rated electric motors available to meet this need but the shielding required makes them expensive.

The benefits of Air motors certainly become apparent where harsh duty cycles are involved. Hold a powered AC or DC motor shaft with a brake and it will soon burn out. An Air motor, on the other hand will just stop, and then continue when the brake is released. There is no component to damage, it just stops and starts again with no ill effect.

Stepper motors are of course ideal for stop/start applications under load but not in the hazardous or sensitive environments involved in hydrocarbon engineering, paint systems, paper converting, wood working and food processing. And, these are the sectors that are increasingly turning to the air motor as a viable alternative to an electrical, variable speed drive.

Many food applications require the equipment to be frequently washed with high pressure caustic cleaning solutions. These conditions often lead to early electric motor failure even with the best sealed design. The plastic Dynatork air motor is corrosion resistant, can operate underwater and can run with water in the compressed air. The fully plastic and stainless piston motor is ideal for wet corrosive enviroments.

Air motors are also ideal where magnetic fields and electro-magnetic interference are design issues – in MRI scanners for example – for use underwater and in stealth applications where a stray signal could give away your position. However not all air motors provide the same performance and here again the engineer needs to consider the options.

Most air motors don't have a good reputation for efficiency but this is a criticism that can only be levelled at vane type motors. In simple terms the vane air motor comprises a cylinder inside which is a rotor with vanes that spins like a windmill. There clearly needs to be a gap between the edge of vane and the casing to allow its free movement and it's this aspect that makes the vane motor very difficult to seal. As a result a lot of air is wasted.

The unique free-floating piston in a Dynatork Air motor is much easier to seal. During operation the compressed air is trapped within the piston and cylinder configuration. It is therefore far more cost efficient as most of the energy stored up in the compressed air is converted into motion. It consumes up to 80% less air than a vane motor providing significant cost savings even at maximum torque.

Aside from energy costs, the vane motor remains a good choice if the speed requirement is above 800 RPM and the application calls for a steady duty cycle. However if the application involves fast acceleration, stop/start and reverse at lower speeds then a Dynatork piston motor is the answer. Its free-floating pistons transmit maximum torque on start-up that can be adjusted via a pressure regulator. Speed is adjusted to fine limits by restrictors on the exhaust port. Pulse counters can also be specified to program direction of rotation, speed and number of revolutions.

So, for flexibility, reliability and cost efficiency the case for the piston air motor is proven.

Contents

The Case for Piston Air Motors.....2

Applications.....4

Advantages.....5

Air Motors
Aluminium Motors
Dynatork 1.....6
Dynatork 3.....8
Dynatork 7.....10

Acetal Motors
Dynatork 1A.....12
Dynatork 3A.....14

Geared Motors
Planetary Aluminium.....16
Planetary Acetal.....18

Helical.....20

Worm.....24

Service Kits.....27

Applications

Agriculture
- Portable Conveyor Drive
- Cattle Gate Drive

Aerospace
- Work Platform Positioning Units
- Scissor Lifts
- Portable Equipment
- Antenna Drive Systems
- Mechanical Handling
- Sand / Shot Blasting Table Drivers

Automotive
- Paint Stirring
- Assembly Line
- Trolley Drive
- Life Testing Components
- Tire Carousels Drive
- Lube Pump Drive

Chemical Industry
- Stirring
- Agitation
- Valve Modulation
- Dispensing Machines
- Volumetric Filling
- Conveyor Drive
- Indexing
- Process Plant
- Peristaltic Pump Drive
- Dosing Plant Drive

Food
- Small Conveyors
- Agitative
- Mixing
- Rotating Tables
- Labelling Machines
- Brushing
- Peristaltic Pump Drive
- Modulating Valve Control Drive
- Carton Filling Machines
- Bucket Elevators
- Cap Applications
- Slow Feed - Fast Return Wrapping

General Engineering
- High Pressure Water Jet
- Life Testing Equipment
- Conveyor Belt and Roller
- Stirrers
- Winding, Unwinding
- Constant Reversal Applications

Machine Tool
- Clamping
- Capston Drive
- Bar Feed Drive
- Lead Screw Drive
- Slow Speed Positional Drive
- Sheet Steel Press Feeding & Tensioning System

Marine
- Submerged Propeller Drive
- Bow / Stern Servo Control Drive
- Diesel Engine Speed Control (remote)
- Boarding Ladder Control Drive
- Windscreen Wiper Drive

Mechanical Handling
- Conveyor Drive
- Indexing Tables
- Clamping
- Scissor Lifts
- Lead Screw Drive
- Heavy Vehicle Drive
- Chute Positioning
- Stacking Machines
- Un-stacking Machines
- Nip Roller Drive
- Heavy Trolley Drives (up to 30 tons)

Medical
- Auxiliary Drive running on Nitrogen
- Scanning Machine Drive
- Peristaltic Pump Gear Pump

Oil Industry
- Back Flush Filter Drive
- Valve Modulation
- Cable Winding / Unwinding
- Pipe Launching
- Pipe Welding Drive Systems

Packaging and Labelling
- Labelling Machine Conveyors
- Wind Up of Label Backing Strips
- Conveyor Drive
- Back Tensioning on Label Reels
- Clamping
- Staple Gun Positioning
- Filling Machines
- Carousel Drive
- Volume Adjustment
- Conveyors
- Cap Tightening
- Slow Feed - Fast Return Bagging

Paper / Printing Industry
- Solvent Pump Drive
- Ink Pump Drive
- Paper Mill Belt Cleaning in High Temperature
- Oscillating Drive
- Paper Reel Drive Roller
- Conveyor (Stop / Start)

Steel Industry
- Nip Roller Drive
- Modulating Drive for Steel Casting
- Spray Nozzle Drive
- Slow Rotation of Large Ingots
- Clamping / Positioning Large Ingots
- Ladle Pouring Controller Drive
- Conveyor Drives
- Heavy Trolley Drive

Textile
- Carpet Winding on Drums
- Dying Process Plant for Winding off Stenter Machines
- Web Tracking Drives with Modulating Control
- Handling Equipment Drives

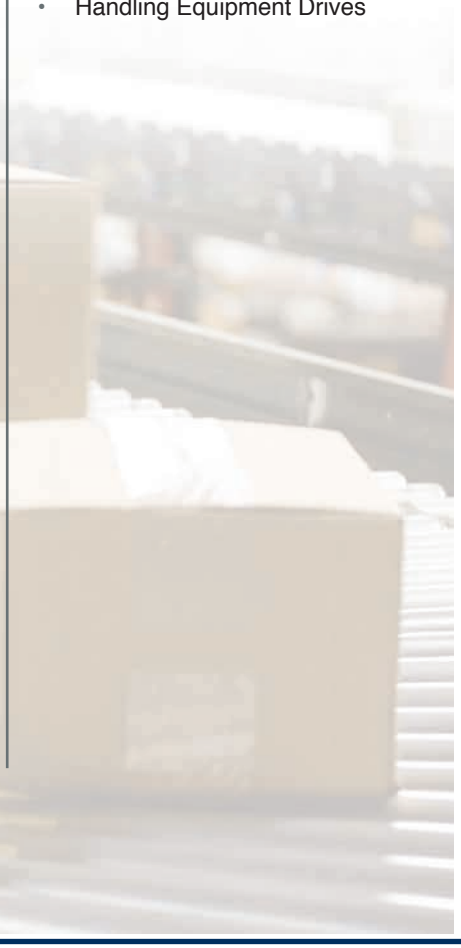

The Advantages of Huco Dynatork Air Motors

Energy Saving

The Dynatork piston air motor traps the compressed air within the piston/cylinder allowing for maximum energy conversion. It uses up to 80% less air than a vane style motor providing a short investment payback. In comparison a ½ HP piston motor will typically use 12 CFM (cubic feet/minute) less compressed air than a ½ HP vane style motor. A 12 CFM reduction running 24 hours per day 365 days/year could provide a savings of over $1300 per year in operating cost.

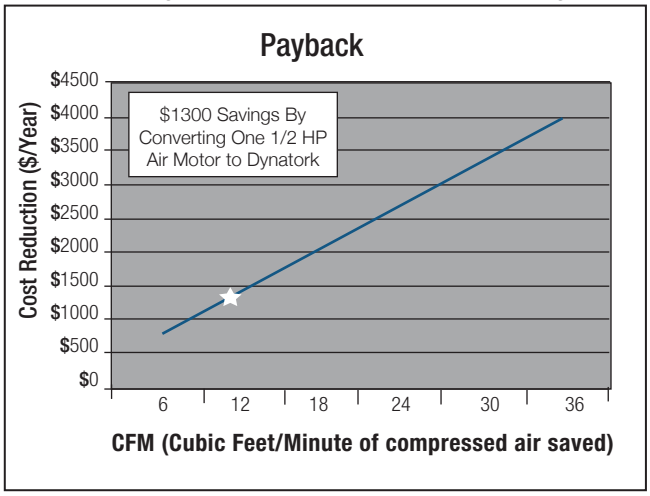

Quiet Operation

Dynatork air motors have very low noise levels when compared with standard air motors. They can operate in harsh environmental conditions and are unaffected by airline condensate.

Clean Environment

Dynatork air motors can be supplied for a non-lubricated gas supply in clean areas so eliminating contamination in a clean environment.

Controllable Speed & Torque

Speed control can be adjusted to fine limits by the use of restrictors on the exhaust ports. The speed can be instantly changed to a higher or lower speed due to fast response times.

Max Torque at Zero RPM

Floating pistons transmit the maximum torque at start which can be adjusted by the use of a pressure regulator.

Instant Stop-Start

Dynatork motors can stop-start and drive under load with characteristics similar to a Stepping Motor.

Reversing

The reversing of the Dynatork Air Motors is achieved by using 5 port control valves, giving near instant response even under load.

Programmed Control

Dynatork air motors can be fitted with sensors to enable programmed control by pulse counters to control rotation direction, speed and number of revolutions.

High Torque Output

Torques up to 550Nm achievable using reduction gearboxes.

ATEX Approved Available

Safe for use in hazardous areas.

Corrosion Resistant

Ideal for the food and pharmaceutical industry. Can even be used fully submerged.

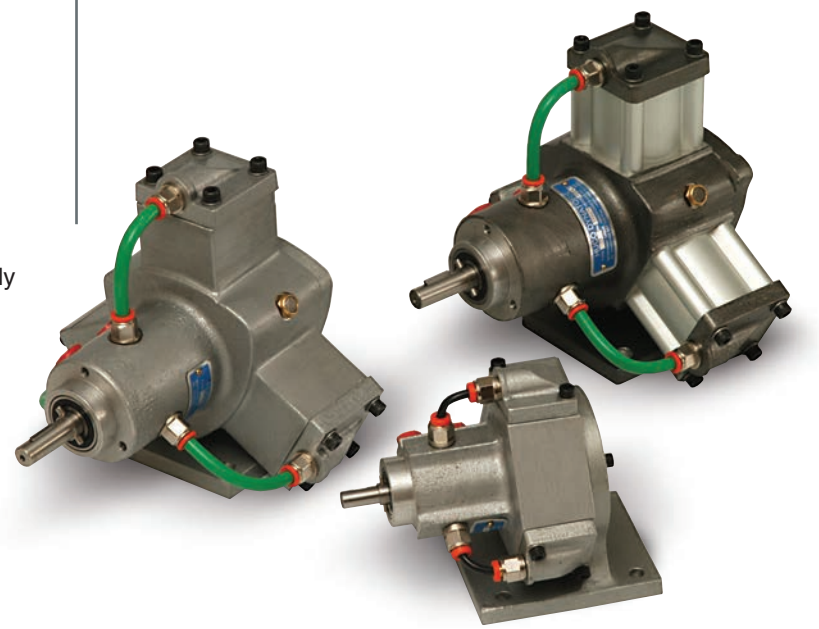

environmental benefits

Dynatork 1 | Aluminum

Part Numbers - Dynatork 1

Item Number	Lubrication	Mounting Type
900.10.A	yes	Body
900.10.B	yes	Base
900.10.C	yes	IEC Flange
900.10.C56N	yes	NEMA 56C Flange
900.15.A	non-lube	Body
900.15.B	non-lube	Base
900.15.C	non-lube	IEC Flange
900.15.C56N	non-lube	NEMA 56C Flange

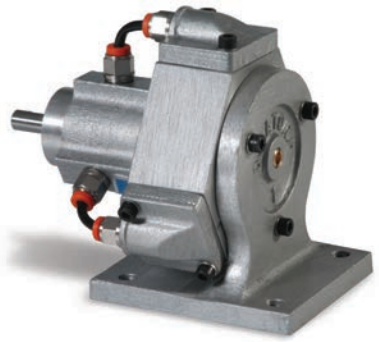

Key Data

	Dynatork 1	
	metric	imperial
Speed range	200 - 800 rpm	200 - 800 rpm
Torque at 200 rpm / 6.9 bar (100 psi)	2.79 Nm	24.7 in.lb
Torque at 800 rpm / 6.9 bar (100 psi)	1.66 Nm	14.7 in.lb
Max air consumption 800 rpm / 6.9 bar	9.7 m3/h	5.70 ft3/min
Shaft Diameter	10 mm	0.374"
Weight	1.13 kg	2.5 lb
Overall length	132 mm	5.20"
Overall width	125 mm	4.92"
Ports	1/8" BSP	1/8" BSP

Lube: for use with a lubricated air supply
Non-Lube only: for use with clean, non-lubricated air supply

Performance (metric)

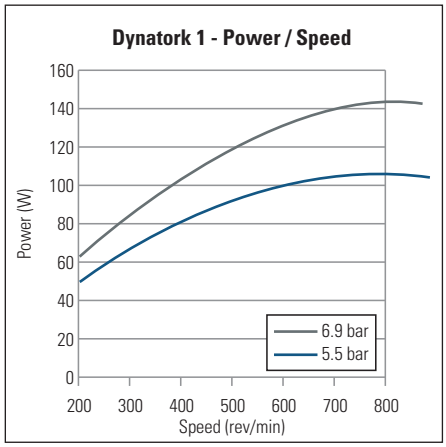

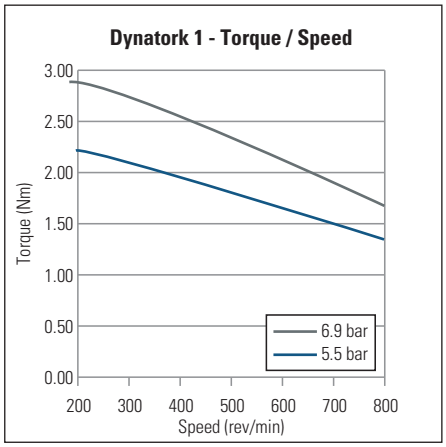

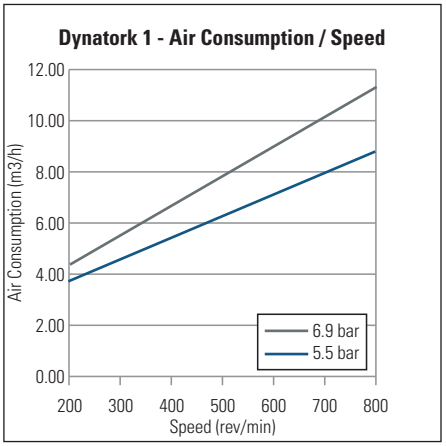

Performance (imperial)

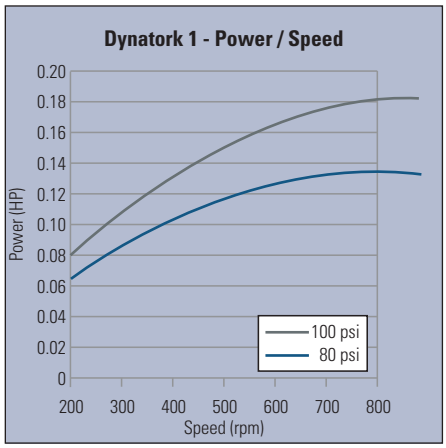

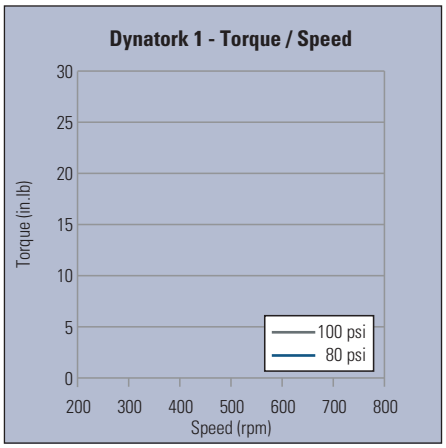

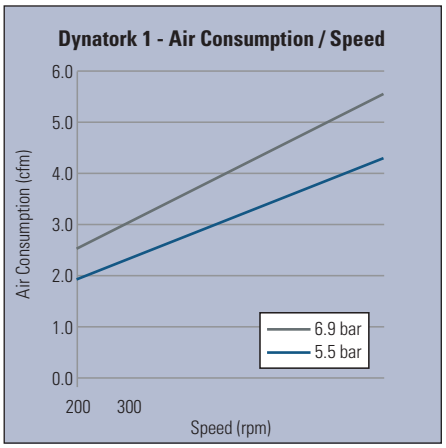

Mounting Options

Dimension Drawings: inch (mm)

Body Mounting

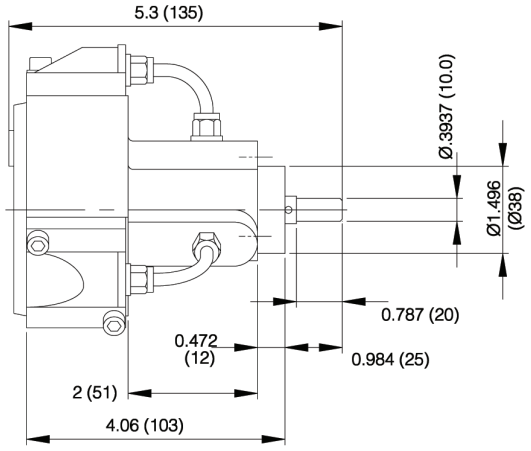

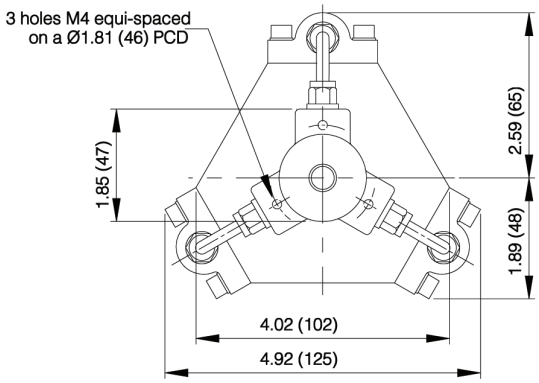

Base Mounting

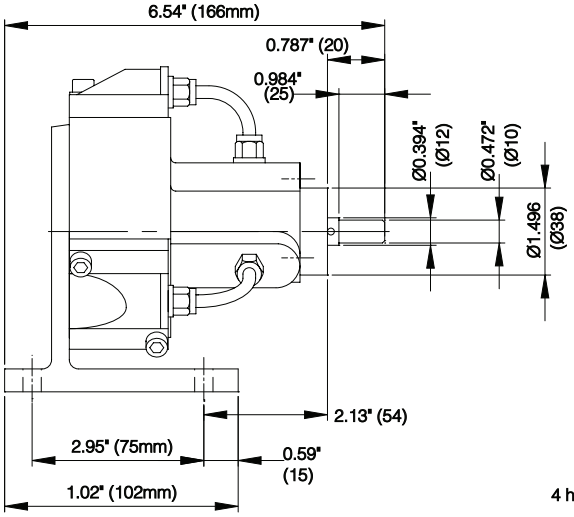

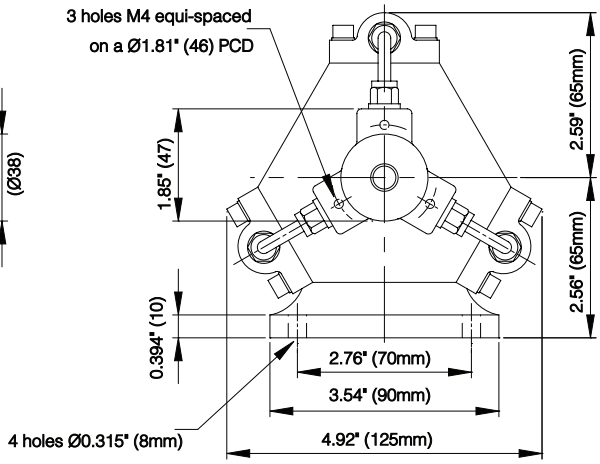

IEC Flange Mounting

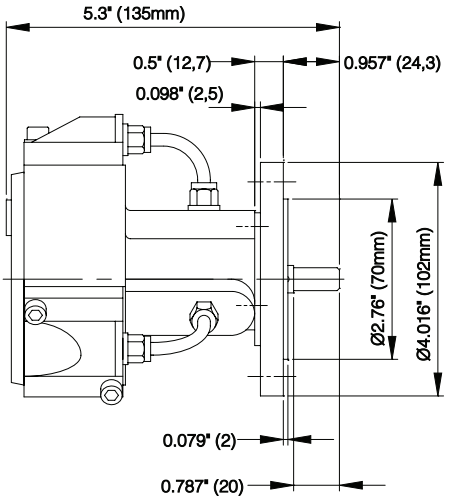

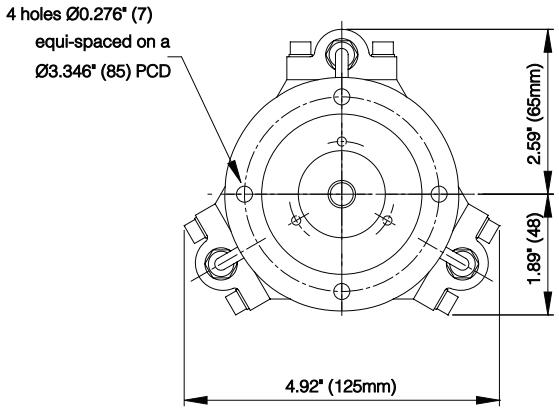

Note: NEMA 56C Flange configuration available but not shown

Dynatork 3 | Aluminum

Part Numbers - Dynatork 3

Item Number	Lubrication	Mounting Type
900.30.A	yes	Body
900.30.B	yes	Base
900.30.C	yes	IEC Flange
900.30.C56N	yes	NEMA 56C Flange
900.35.A	non-lube	Body
900.35.B	non-lube	Base
900.35.C	non-lube	IEC Flange
900.35.C56N	non-lube	NEMA 56C Flange

Key Data

	Dynatork 3	
	metric	imperial
Speed range	150 - 700 rpm	150 - 700 rpm
Torque at 200 rpm / 6.9 bar (100 psi)	9.9 Nm	87 in.lb
Torque at 700 rpm / 6.9 bar (100 psi)	4.6 Nm	41 in.lb
Max air consumption 700 rpm / 6.9 bar	21.6 m3/h	12.7 ft3/min
Shaft Diameter	12.7mm	0.5"
Weight	3.4 kg	7.5 lb
Overall length	210 mm	8.3"
Overall width	210 mm	8.3"
Ports	1/4" BSP	1/4" BSP

Lube: for use with a lubricated air supply
Non-Lube only: for use with clean, non-lubricated air supply

Performance (metric)

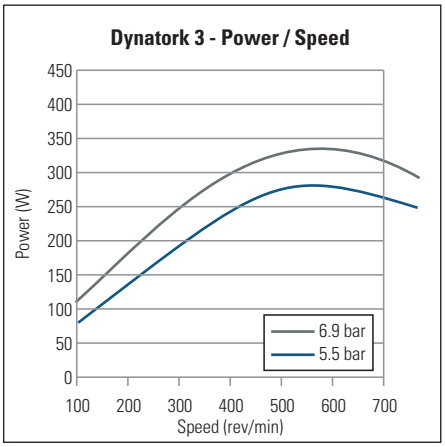

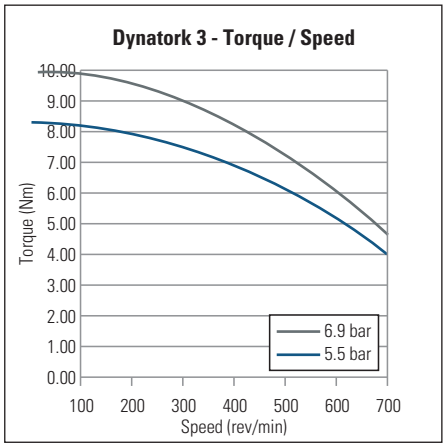

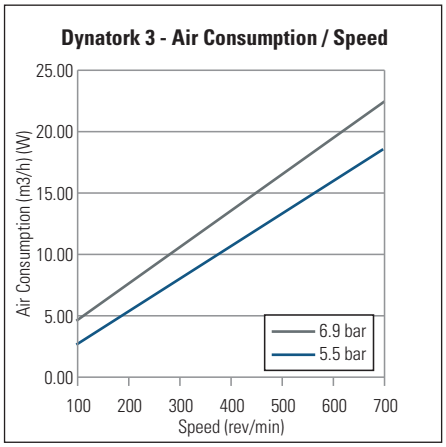

Performance (imperial)

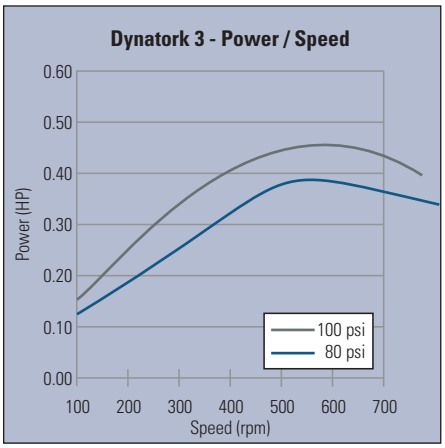

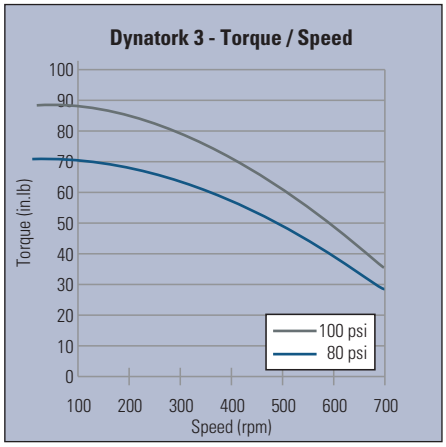

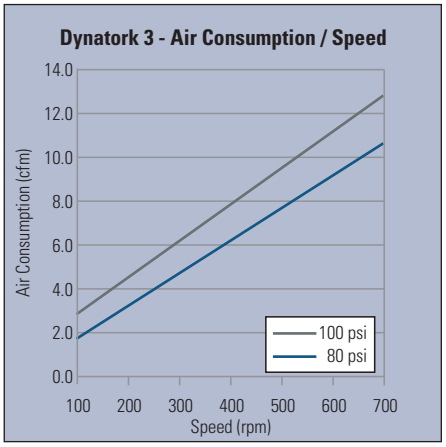

Mounting Options

Dimension Drawings: inch (mm)

Body Mounting

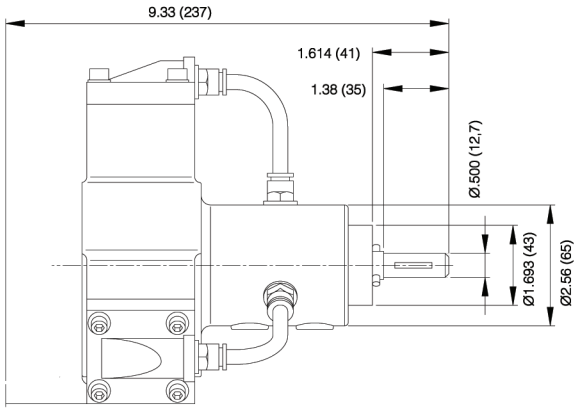

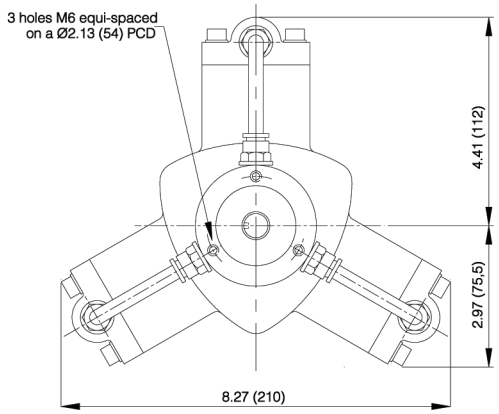

Base Mounting

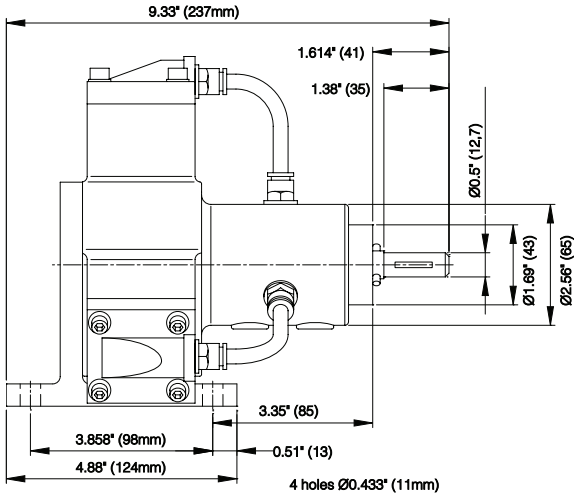

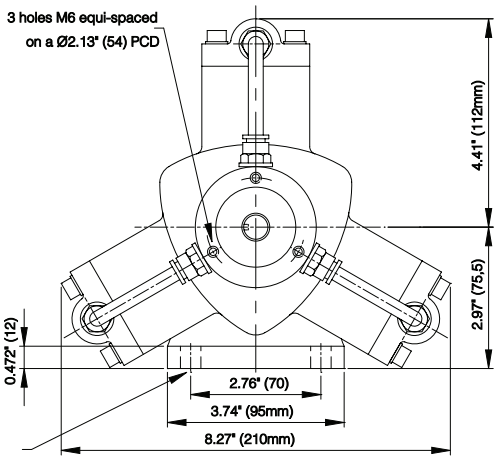

IEC Flange Mounting

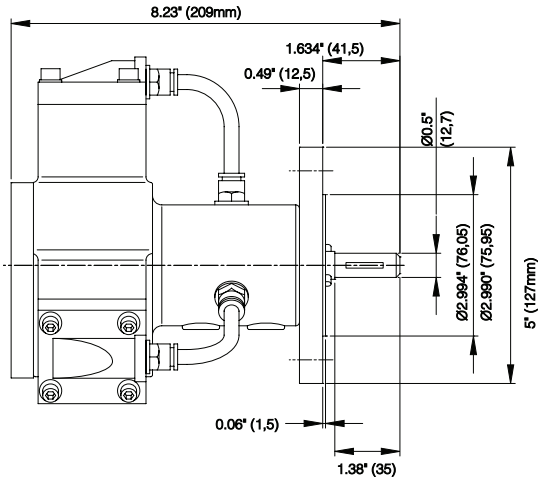

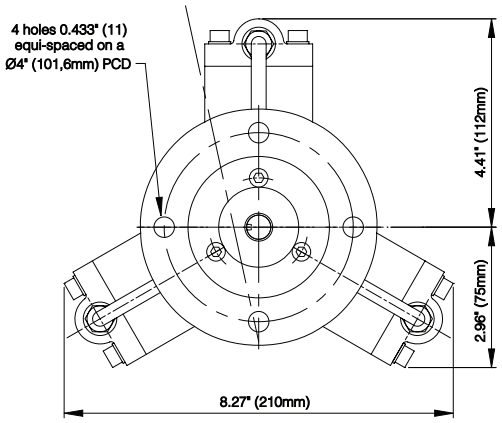

Note: NEMA 56C Flange configuration available but not shown

Dynatork 7 | Aluminum

Part Numbers - Dynatork 7

Item Number	Lubrication	Mounting Type
900.70.A	yes	Body
900.70.B	yes	Base
900.70.C	yes	IEC Flange
900.70.C56N	yes	NEMA 56C Flange
900.75.A	non-lube	Body
900.75.B	non-lube	Base
900.75.C	non-lube	IEC Flange
900.75.C56N	non-lube	NEMA 56C Flange

Key Data

	Dynatork 7	
	metric	imperial
Speed range	100 - 400 rpm	100 - 400 rpm
Torque at 100 rpm / 6.9 bar (100 psi)	15.7 Nm	139 in.lb
Torque at 400 rpm / 6.9 bar (100 psi)	7.8 Nm	69 in.lb
Max air consumption 800 rpm / 6.9 bar	11.9 m3/h	7.0 ft3/min
Shaft Diameter	12.7 mm	0.5"
Weight	4 kg	8.8 lb
Overall length	212 mm	8.3"
Overall width	253 mm	10"
Ports	1/4" BSP	1/4" BSP

Lube: for use with a lubricated air supply
Non-Lube only: for use with clean, non-lubricated air supply

Performance (metric)

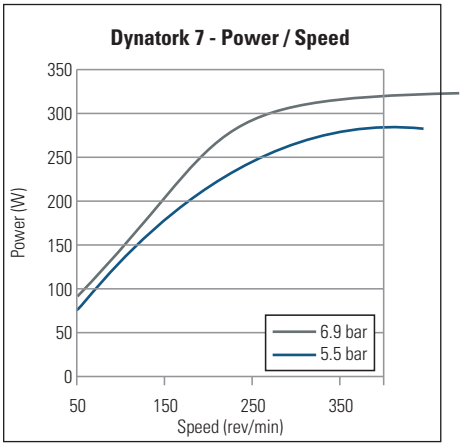

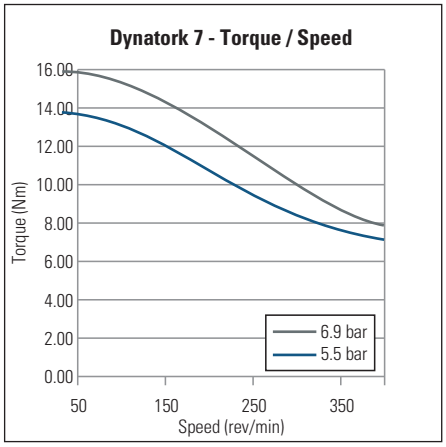

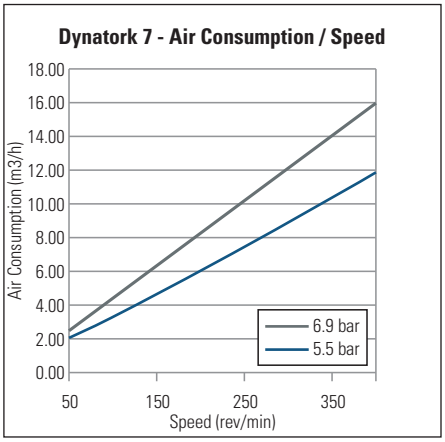

Performance (imperial)

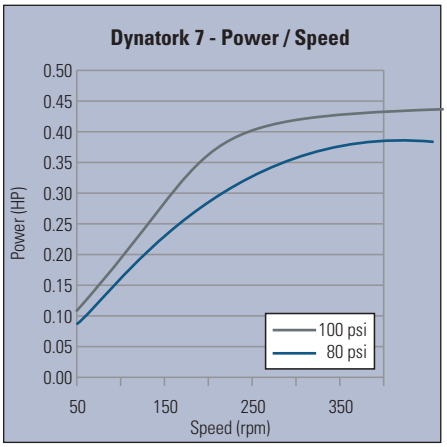

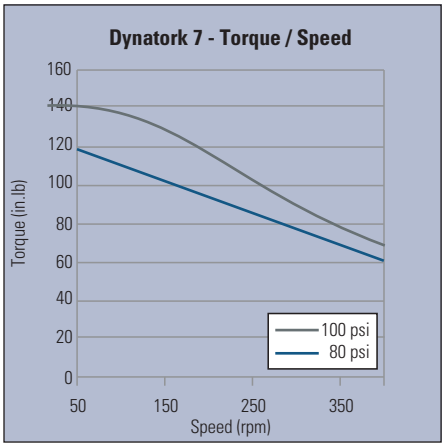

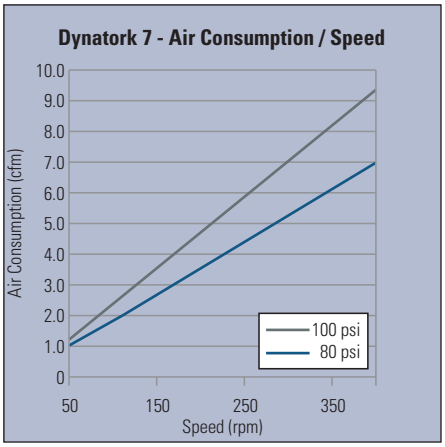

Mounting Options

Dimension Drawings: inch (mm)

Body Mounting

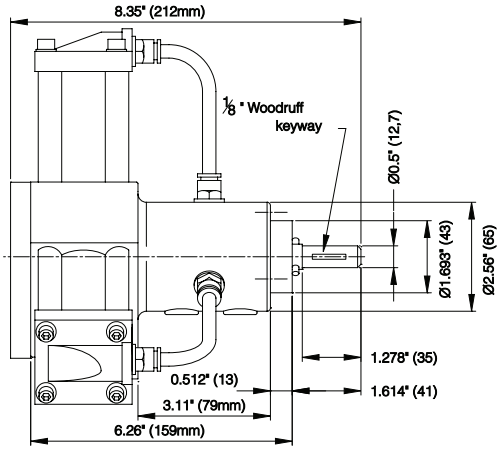

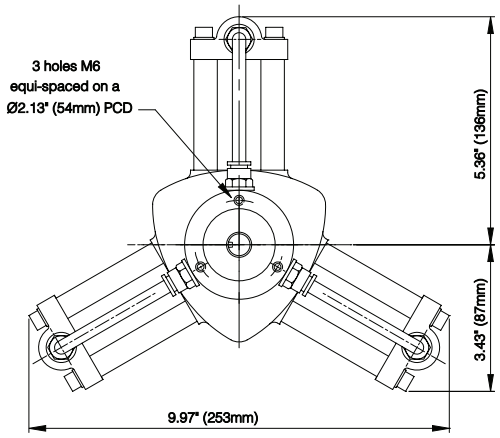

Base Mounting

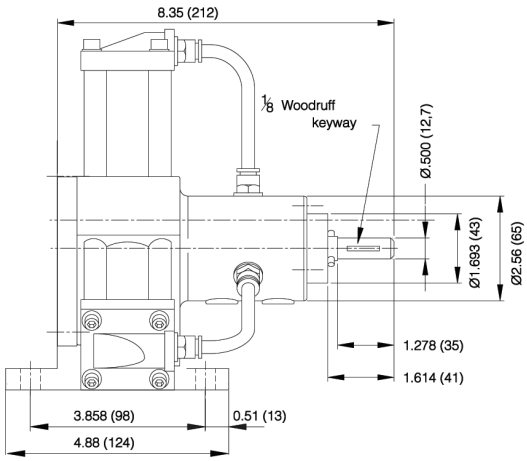

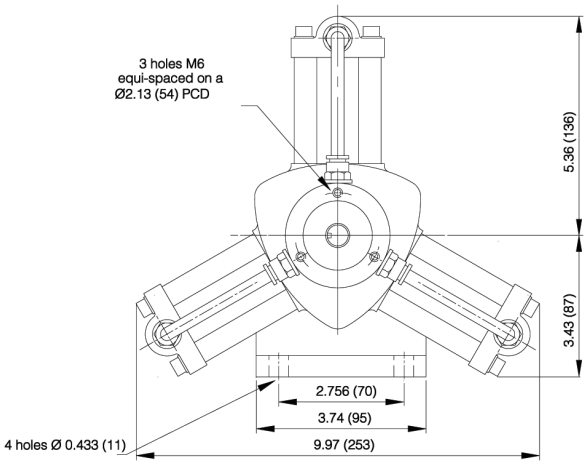

IEC Flange Mounting

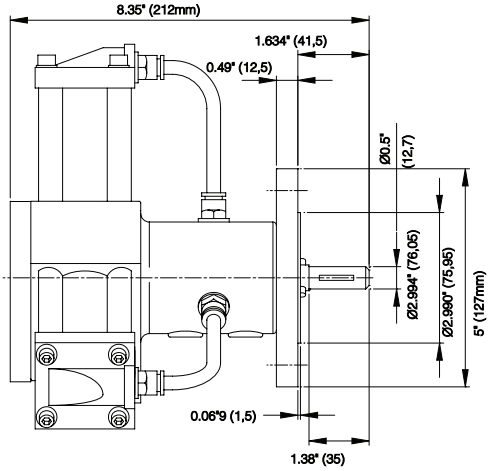

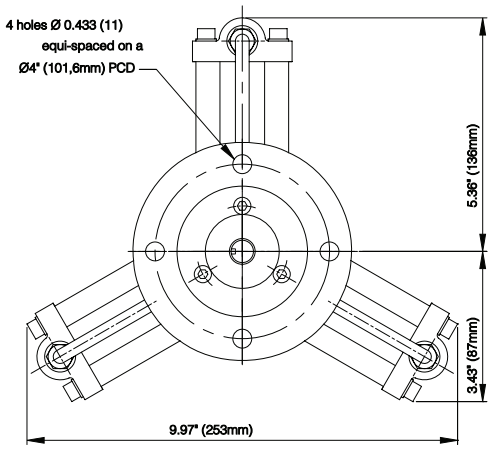

Note: NEMA 56C Flange configuration available but not shown

Dynatork 1 | Acetal

Part Number - Dynatork 1 Acetal

Item Number	Lubrication	Mounting Type
910.15.A	non-lube	Body Mount
910.15.C	non-lube	IEC Flange
910.15.C56N	non-lube	NEMA 56C Flange

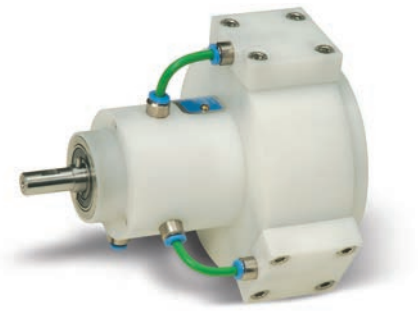

Key Data

	Dynatork 1 Acetal	
	metric	imperial
Speed range	200 - 800 rpm	200 - 800 rpm
Torque at 200 rpm / 6.9 bar (100 psi)	2.79 Nm	24.7 in.lb
Torque at 800 rpm / 6.9 bar (100 psi)	1.66 Nm	14.7 in.lb
Max air consumption 800 rpm / 6.9 bar	9.7 m3/h	5.70 ft3/min
Shaft Diameter	10 mm	0.394"
Weight	1.13 kg	2.5 lb
Overall length	140 mm	5.51"
Overall width	125 mm	4.92"
Ports	1/8" BSP	1/8" BSP

Non-Lube only: for use with clean, non-lubricated air supply

Performance (metric)

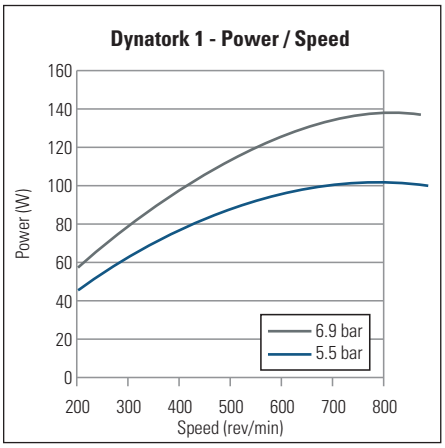

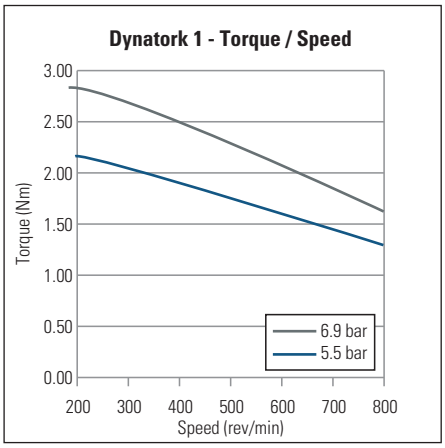

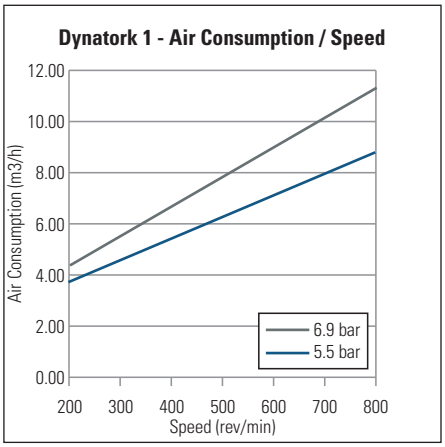

Performance (imperial)

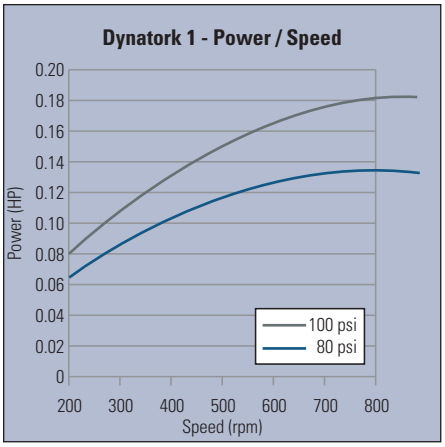

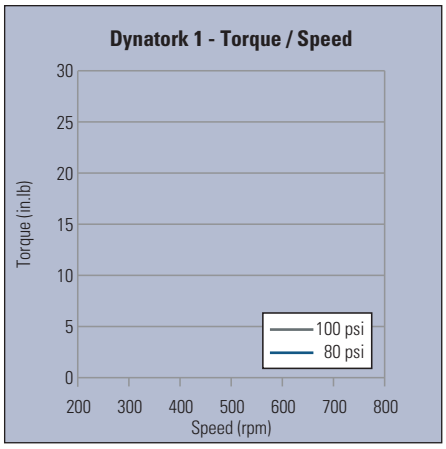

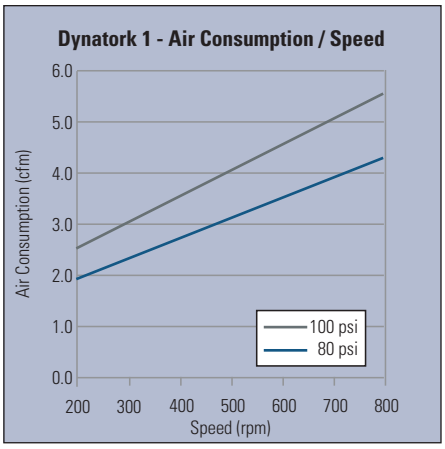

Mounting Options

Dimension Drawings: inch (mm)

Body Mounting

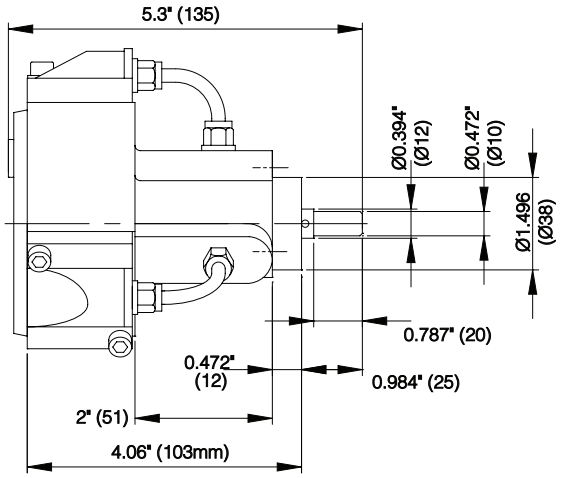

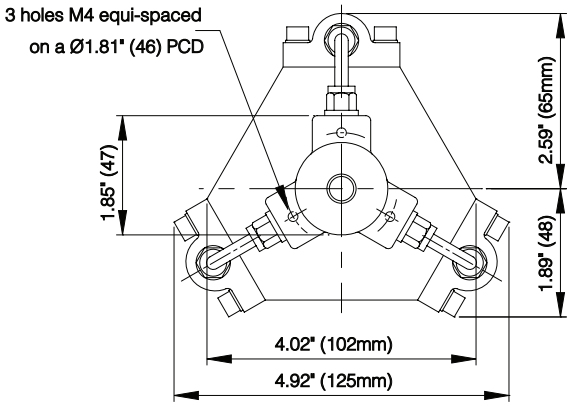

IEC Flange Mounting

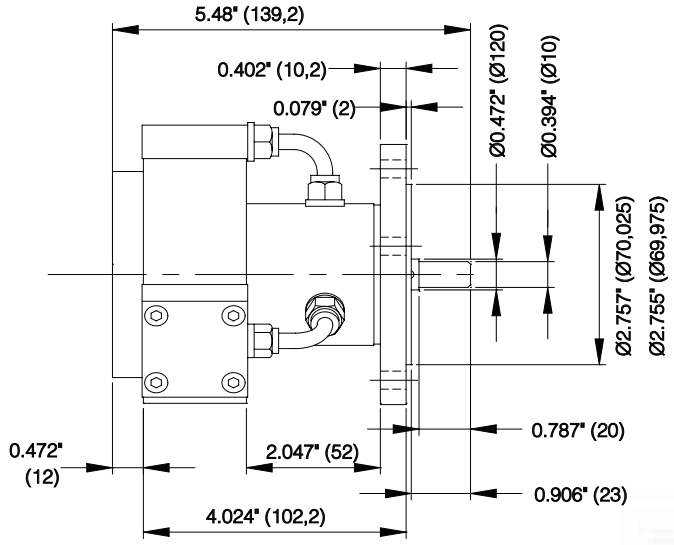

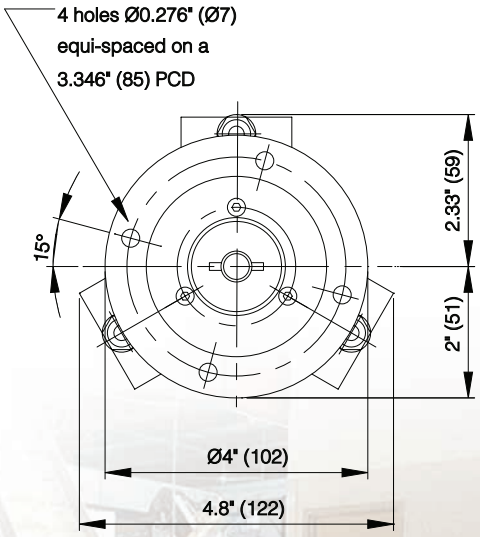

Note: NEMA 56C Flange configuration available but not shown

Dynatork 3 | Acetal

Part Number - Dynatork 3

Item Number	Lubrication	Mounting Type
910.35.A	non-lube	Body
910.35.B	non-lube	Base
910.35.C	non-lube	IEC Flange
910.35.C56N	non-lube	NEMA 56C Flange

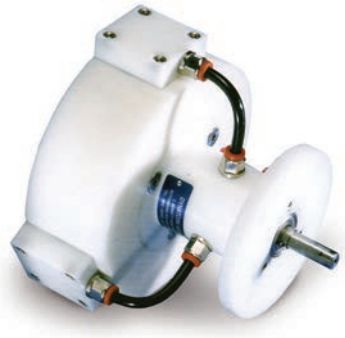

Key Data

	Dynatork 3 Acetal	
	metric	imperial
Speed range	150 - 700 rpm	150 - 700 rpm
Torque at 200 rpm / 6.9 bar (100 psi)	9.9 Nm	87 in.lb
Torque at 700 rpm / 6.9 bar (100 psi)	4.6 Nm	41 in.lb
Max air consumption (700 rpm / 6.9 bar	21.6 m3/h	12.7 ft3/min
Shaft Diameter	12.7mm	0.5"
Weight	3.9 kg	8.5 lb
Overall length	207 mm	8.15"
Overall width	210 mm	8.3"
Ports	1/4" BSP	1/4" BSP

Non-Lube only: for use with clean, non-lubricated air supply

Performance (metric)

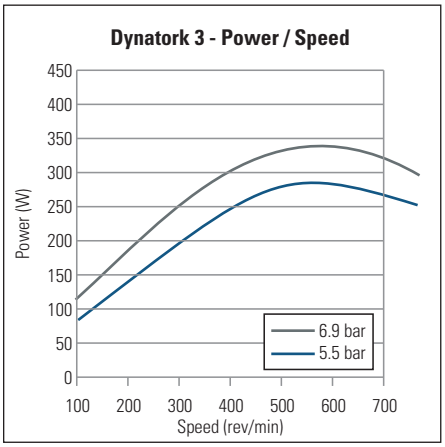

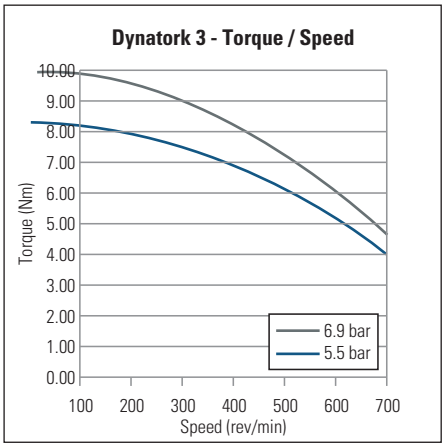

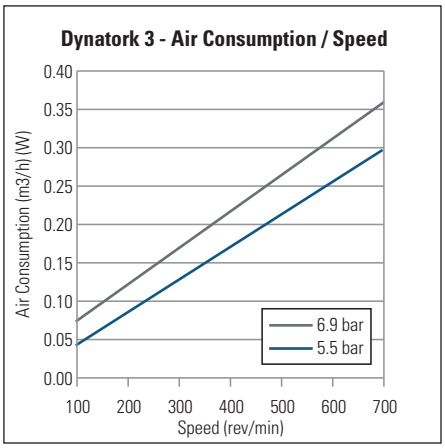

Performance (imperial)

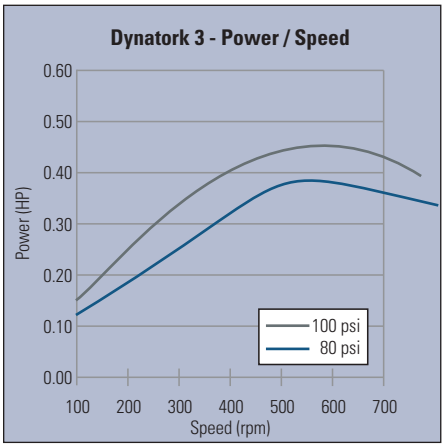

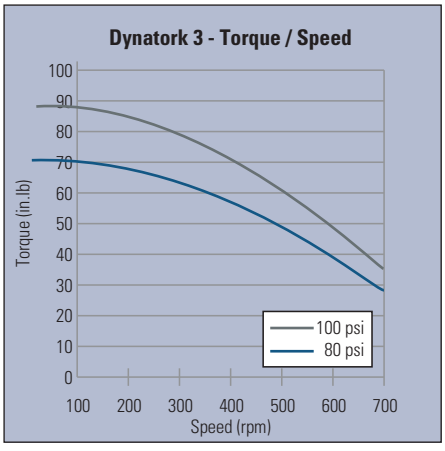

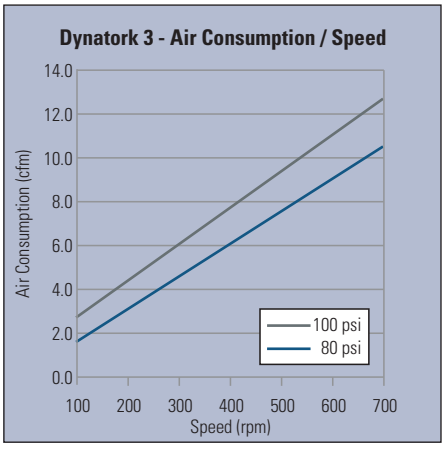

Mounting Options

Dimension Drawings: inch (mm)

Body Mounting

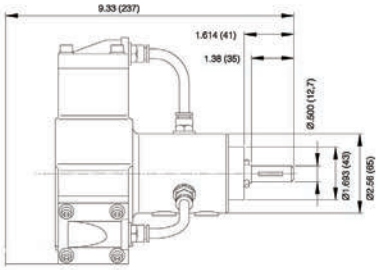

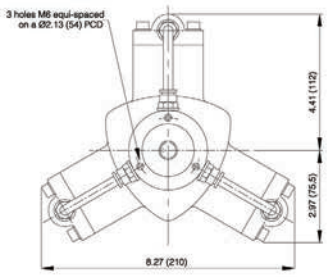

IEC Mounting

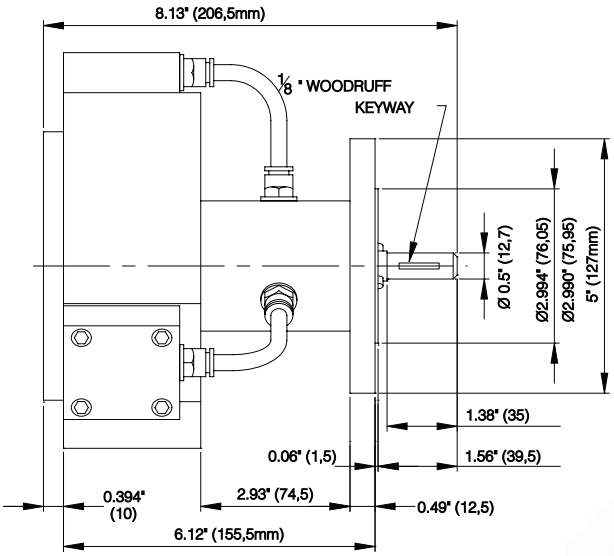

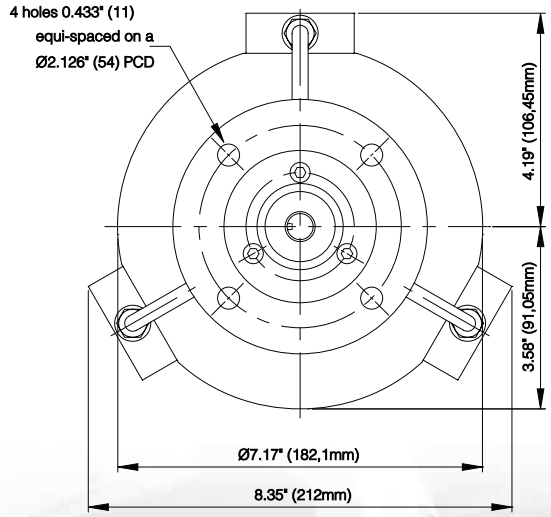

Note: NEMA 56C Flange configuration available but not shown

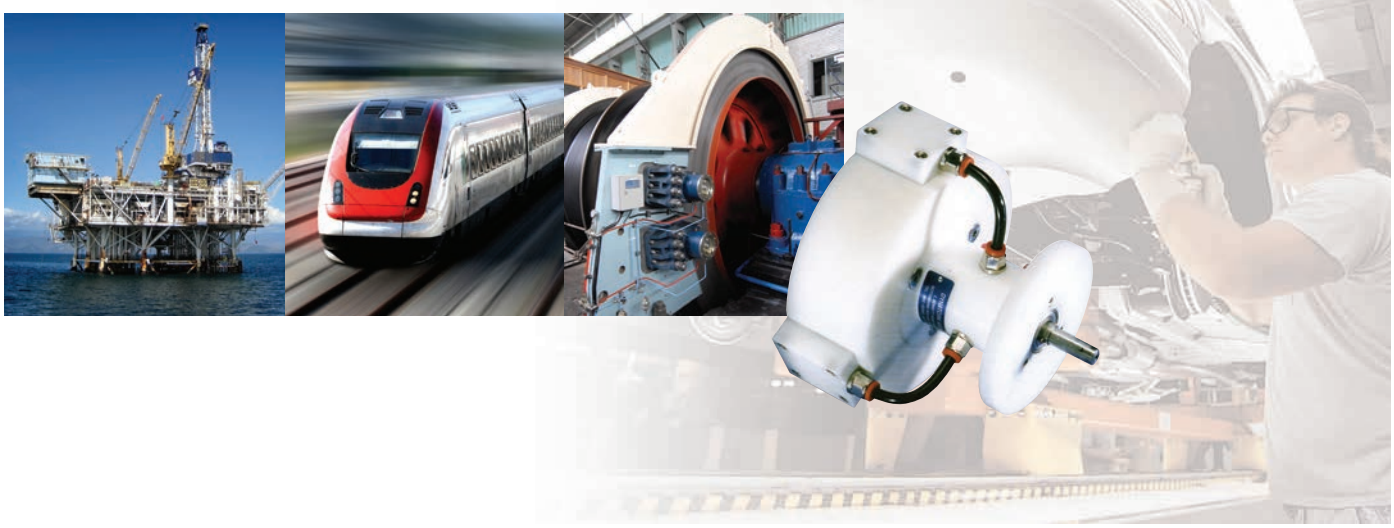

Dynatork 1 and 3

Part Number Example 901.15.02

901 • **15** • **02**

901.10	Dynatork 1	Lube
901.15	Dynatork 1	Non-Lube
901.30	Dynatork 3	Lube
901.35	Dynatork 3	Non-Lube

Ratio Order Number (see below)

Order as one complete part number. Include (.) in part number.

- **Available with Dynatork 1 and 3 Motors**
- **Robust, compact and efficient planetary gear units**
- **Ratios from 4:1 to 308:1**
- **Output speeds from 0.32 to 162 rev/min**

Lube: for use with a lubricated air supply
Non-Lube only: for use with clean, non-lubricated air supply

Key Data

Motor Size	Dynatork 1	Dynatork 3
Maximum diameter (mm)	130	210
Output shaft diameter (mm)	14	19
Output shaft effective length (mm)	30	40
Maximum radial shaft load (N)	520	600
at (L) distance from face (mm)	10	20
Max. continuous output torque (Nm)	40	80
Weight 1 stage (kg)	4.5	5.5
Weight 2 stage (kg)	5	6.5
Weight 3 stage (kg)	5.5	8.5

For Output Torque

1 Locate the motor torque/speed graph on page 6 (size 1) or page 8 (size 3).

2 Multiply the motor torque (at a specific RPM) by the chosen ratio to give the output torque.

3 Verify that output speed and torque meet application requirements.

Speed/Ratio Selection

	Ratio Order Number										
	01	02	03	04	05	06	07	08	09	10	11
Ratio:1	3.7	6.75	13.73	19.2	25	29	46	51	93	169	308
Motor RPM	Planetary Output Speed (RPM)										
600	162.2	88.9	43.7	31.3	24	20.7	13.0	11.8	6.5	3.6	1.9
500	135.1	74.1	36.4	26.0	20	17.2	10.9	9.8	5.4	3.0	1.6
400	108.1	59.3	29.1	20.8	16	13.8	8.7	7.8	4.3	2.4	1.3
300	81.0	44.4	21.8	15.6	12	10.3	6.5	5.8	3.2	1.8	0.9
200	54.1	29.6	14.6	10.4	8	6.9	4.3	3.9	2.2	1.2	0.6
100	27.0	14.8	7.3	5.2	4	3.4	2.2	2.0	1.1	0.6	0.3
	Single Stage			Two Stage				Three Stage			

Dynatork 1

Dimension Drawings: inch (mm)

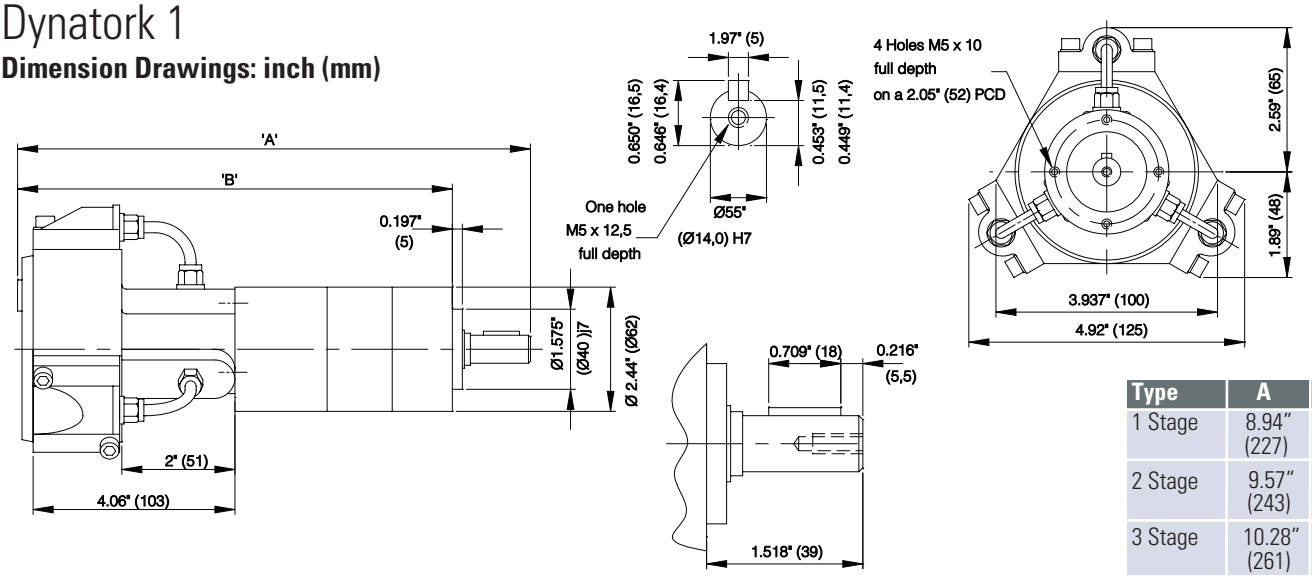

Type	A	B
1 Stage	8.94" (227)	7.40" (188)
2 Stage	9.57" (243)	8.03" (204)
3 Stage	10.28" (261)	8.74" (222)

Dynatork 3

Dimension Drawings: inch (mm)

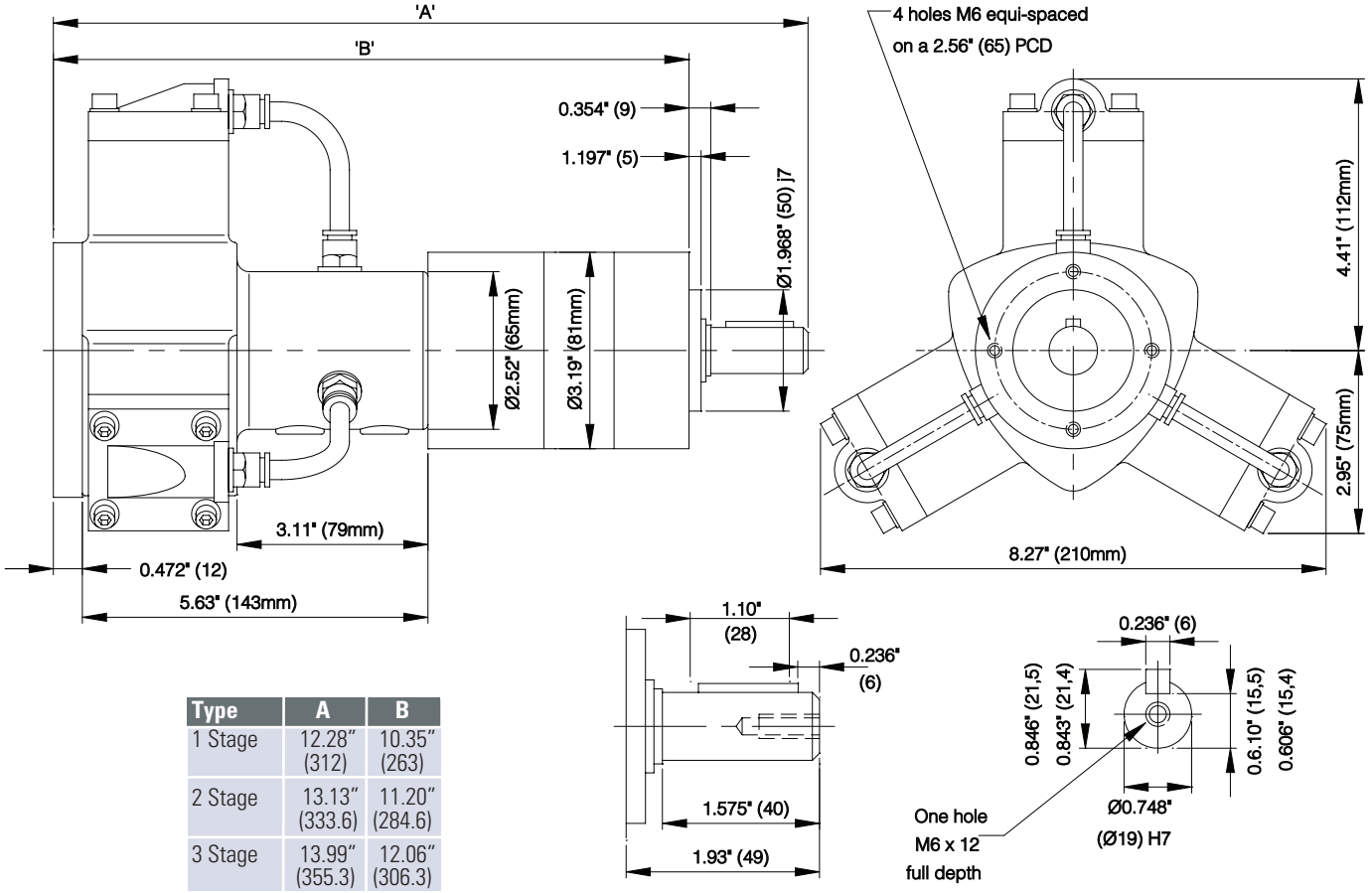

Type	A	B
1 Stage	12.28" (312)	10.35" (263)
2 Stage	13.13" (333.6)	11.20" (284.6)
3 Stage	13.99" (355.3)	12.06" (306.3)

Dynatork 1 and 3

Part Number Example 911.15.09

911 • **15** • **09**

911.15	Dynatork 1	Non-Lube
911.35	Dynatork 3	Non-Lube

Ratio Order Number (see below)

Order as one complete part number. Include (.) in part number.

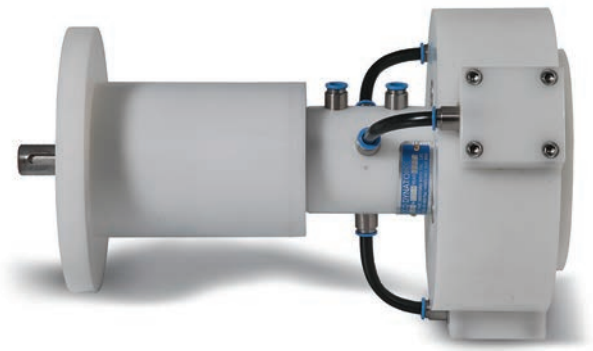

- **Available with Dynatork 1 and 3 (Acetal) Motors**
- **Robust, compact and efficient planetary gear units**
- **Ratios from 4:1 to 308:1**
- **Output speeds from 0.32 to 162 rev/min**
- **Stainless shafting and fittings**

Non-Lube only: for use with clean, non-lubricated air supply

Key Data

Motor Ref: (Non-Lube)	911.15	911.35
Motor Size	**Dynatork 1**	**Dynatork 3**
Maximum diameter (mm)	121	211
Output shaft dia.(mm)	14	19
Output shaft effective length (mm)	36	40
Maximum radial shaft load (N)	520	600
at (L) distance from face (mm)	10	20
Max. continuous output torque (Nm)	40	80
Weight 1 stage (kg)	4.5	5.5
Weight 2 stage (kg)	5	6.5
Weight 3 stage (kg)	5.5	8.5

For Output Torque

1 Locate the motor torque/speed graph on page 6 (size 1) or page 8 (size 3).

2 Multiply the motor torque (at a specific RPM) by the chosen ratio to give the output torque.

3 Verify that output speed and torque meet application requirements.

Speed/Ratio Selection

	Ratio Order Number										
	01	**02**	**03**	**04**	**05**	**06**	**07**	**08**	**09**	**10**	**11**
Ratio:1	3.7	6.75	13.73	19.2	25	29	46	51	93	169	308
Motor RPM	**Planetary Output Speed (RPM)**										
600	162.2	88.9	43.7	31.3	24	20.7	13.0	11.8	6.5	3.6	1.9
500	135.1	74.1	36.4	26.0	20	17.2	10.9	9.8	5.4	3.0	1.6
400	108.1	59.3	29.1	20.8	16	13.8	8.7	7.8	4.3	2.4	1.3
300	81.0	44.4	21.8	15.6	12	10.3	6.5	5.8	3.2	1.8	0.9
200	54.1	29.6	14.6	10.4	8	6.9	4.3	3.9	2.2	1.2	0.6
100	27.0	14.8	7.3	5.2	4	3.4	2.2	2.0	1.1	0.6	0.3
	Single Stage			Two Stage				Three Stage			

Dynatork 1

Dimension Drawings: inch (mm)

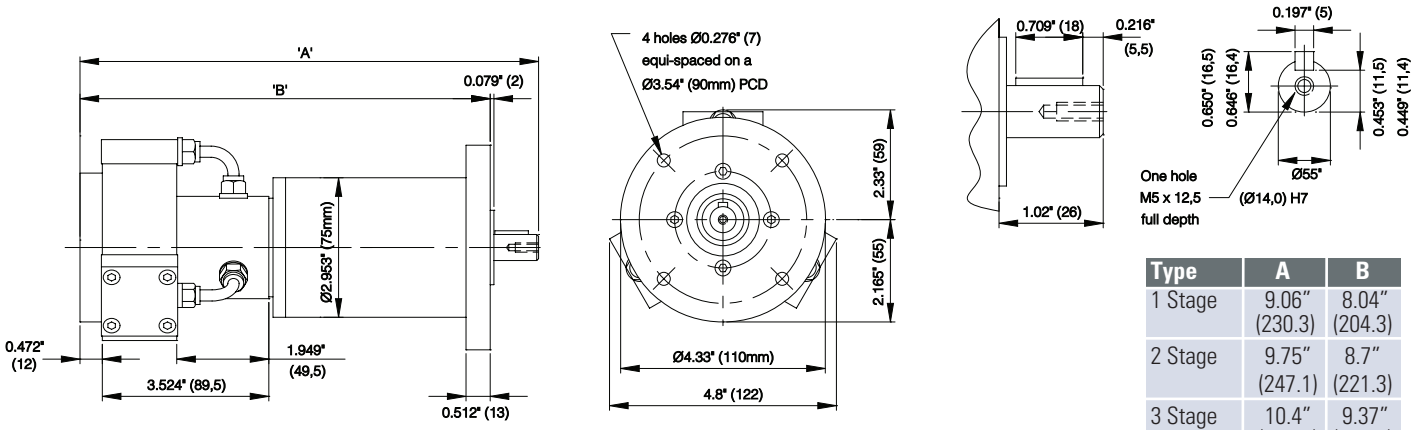

Type	A	B
1 Stage	9.06" (230.3)	8.04" (204.3)
2 Stage	9.75" (247.1)	8.7" (221.3)
3 Stage	10.4" (264.1)	9.37" (238.1)

Dynatork 3

Dimension Drawings: inch (mm)

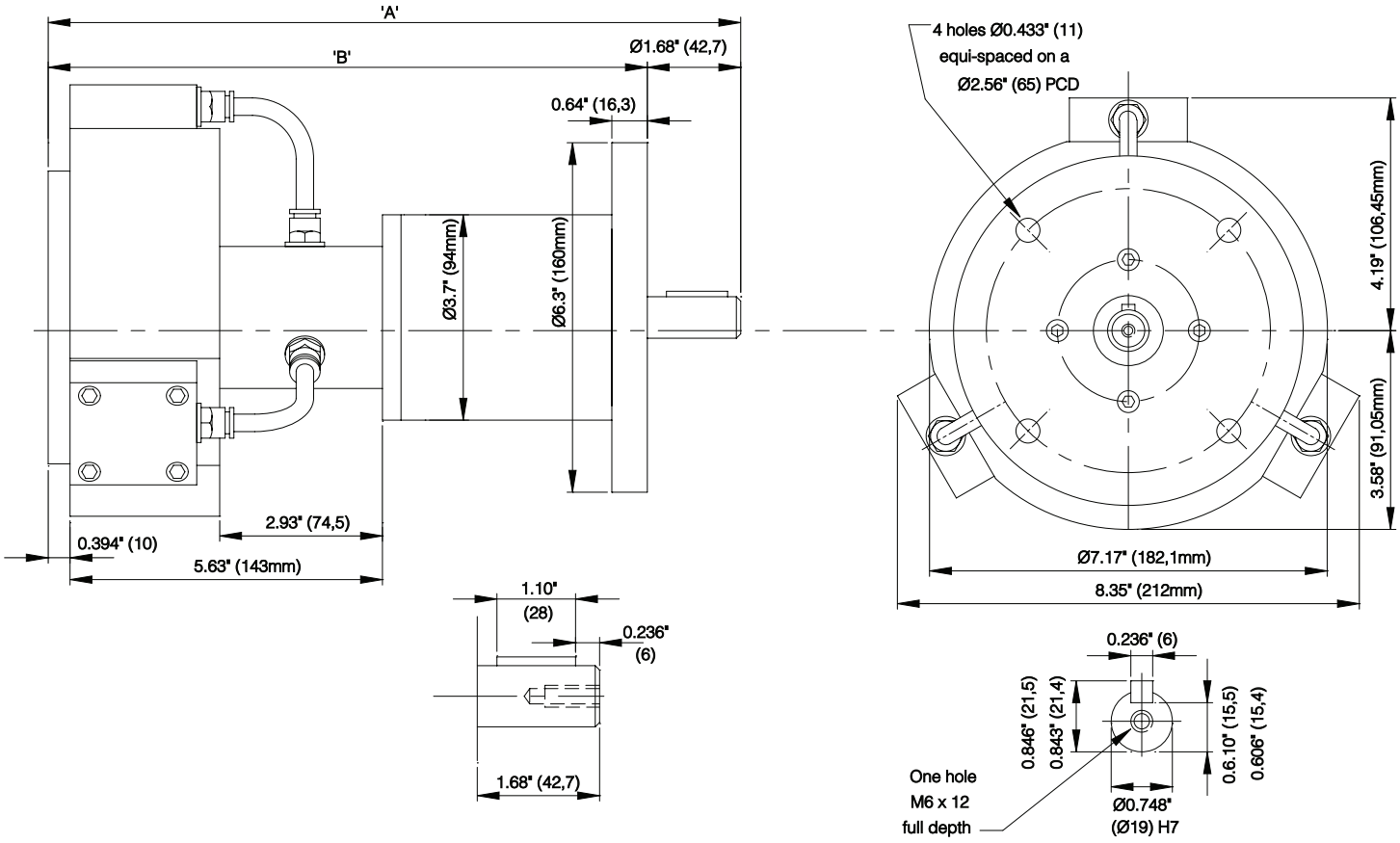

Type	A	B
1 Stage	13.23" (336)	11.65" (296)
2 Stage	14.09" (358)	12.52" (318)
3 Stage	14.96" (380)	13.38" (340)

Geared Motors | Helical Gearboxes

902 • 903 • 905 • 906 • 907

Part Number Example 902.15.06

902 . **15** . **06**

902.10	Dynatork 1	Lube
902.15	Dynatork 1	Non-Lube
903.10	Dynatork 1	Lube
903.15	Dynatork 1	Non-Lube
905.30	Dynatork 3	Lube
905.35	Dynatork 3	Non-Lube
906.30	Dynatork 3	Lube
906.35	Dynatork 3	Non-Lube
907.70	Dynatork 7	Lube
907.75	Dynatork 7	Non-Lube

Ratio Order Number (see below)

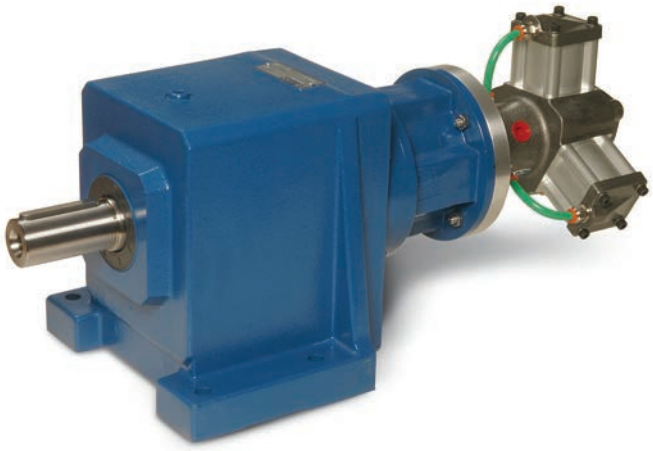

Order as one complete part number. Include (.) in part number.

- **Helical gears for Heavy Duty and continuous running**
- **Ratios from 4:1 to 308:1**
- **Output speeds from 0.37 to 150 rev/min**
- **Maximum continuous output torque 550Nm**

Lube: for use with a lubricated air supply
Non-Lube only: for use with clean, non-lubricated air supply

Key Data

Motor Size	Dynatork 1		Dynatork 3		Dynatork 7
Motor Series	**902**	**903**	**905**	**906**	**907**
Output shaft diameter (mm)	20	25	30	40	40
Output shaft effective length (mm)	40	50	60	80	80
Maximum radial shaft load (kN)	1.9	3.4	3.0	7.0	7.0
at (L) distance from face (mm)	20	25	30	40	40
Max. continuous output torque (Nm)	60	120	200	550	550
Weight (kg)	10	15	33	48	48

For Output Torque

1 Locate the motor torque/speed graph on page 6 (size 1) or page 8 (size 3).
2 Multiply the motor torque (at a specific RPM) by the chosen ratio to give the output torque.
3 Verify that output speed and torque meet application requirements.

Speed/Ratio Selection

Dynatork 1 (902)

	Ratio Order Number									
	01	**02**	**03**	**04**	**05**	**06**	**07**	**08**	**09**	**10**
Ratio:1	4	5.4	6.8	10	12.5	16	21.5	30	40	49
Motor RPM	**Planetary Output Speed (RPM)**									
600	150	111	88	60	48	37.5	27.9	20	15	12.2
500	125	93	74	50	40	31.25	23.3	16.67	12.5	10.2
400	100	74	59	40	32	25	18.6	13.33	10	8.2
300	75	56	44	30	29	78.75	14	10	75	6.1
200	50	37	29	20	16	12.5	9.3	6.67	5	4.1

Speed/Ratio Selection
Dynatork 1 (903)

	Ratio Order Number										
	01	02	03	04	05	06	07	08	09	10	11
Ratio:1	50	56	62	70	82	92	111	137	183	221	276
Motor RPM	Planetary Output Speed (RPM)										
600	12	10.7	9.7	8.6	7.3	6.5	5.4	4.4	3.28	2.71	2.17
500	10	8.9	8.1	7.1	6.1	5.4	4.5	3.6	2.73	2.26	1.81
400	8	7.1	6.5	5.7	4.9	4.3	3.6	2.9	2.18	1.81	1.45
300	6	5.36	4.84	4.29	3.66	3.26	2.7	2.19	1.69	1.36	1.09
200	4	3.57	3.23	2.86	2.44	2.17	1.8	1.46	1.09	0.90	0.72

Speed/Ratio Selection
Dynatork 3 (905)

	Ratio Order Number										
	01	02	03	04	05	06	07	08	09	10	11
Ratio:1	4.67	8.2	10.26	12.3	15.3	20.58	24.64	30.60	40.85	56.42	70.32
Motor RPM	Planetary Output Speed (RPM)										
500	107.1	61.0	48.7	40.7	32.7	24.3	20.3	16.3	12.2	8.86	7.11
400	85.7	48.8	39.0	32.5	26.1	19.4	16.2	13.0	9.8	7.09	5.69
300	64.2	36.6	29.2	24	19.61	14.6	12.2	9.8	7.3	5.32	4.27
200	42.8	24.4	19.5	16.3	13.1	9.7	8.1	6.5	4.9	3.54	2.84
100	21.4	12.2	9.7	8.1	6.5	4.9	4.1	3.3	2.4	1.7	1.42

Speed/Ratio Selection
Dynatork 3 (906)

	Ratio Order Number								
	01	02	03	04	05	06	07	08	09
Ratio:1	25	31	34.8	41.71	46.67	50.2	56.1	62.5	69.88
Motor RPM	Planetary Output Speed (RPM)								
500	20	16.1	14.4	12.0	10.7	9.96	8.91	8.00	7.16
400	16	12.9	11.5	9.6	8.6	7.97	7.13	6.40	5.72
300	12	9.7	8.6	7.2	6.4	5.98	5.35	4.80	4.29
200	8	6.5	5.7	4.8	4.3	3.98	3.57	3.20	2.86
100	4	3.2	2.9	2.4	2.1	1.99	1.78	1.60	1.43

Speed/Ratio Selection
Dynatork 7 (907)

	Ratio Order Number						
	01	02	03	04	05	06	07
Ratio:1	80.81	90.32	107.7	134.6	180.4	216.9	270.2
Motor RPM	Planetary Output Speed (RPM)						
500	4.95	4.43	3.71	2.97	2.22	1.84	1.48
400	3.7	3.32	2.79	2.23	1.66	1.38	1.11
300	2.47	2.21	1.86	1.49	1.11	0.92	0.74
200	1.24	1.11	0.93	0.74	0.55	0.46	0.37

902 Dynatork 1

Dimension Drawings: inch (mm)

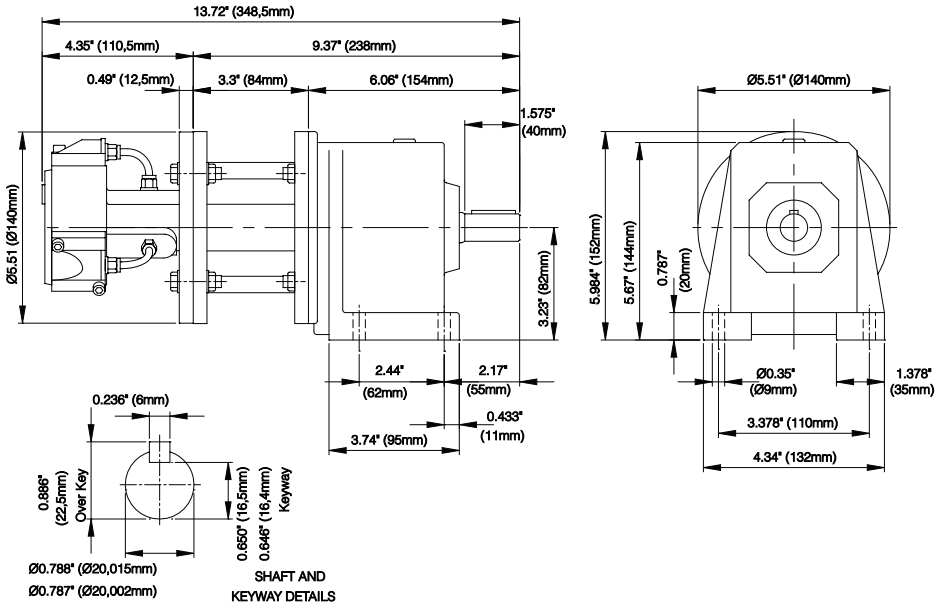

903 Dynatork 1

Dimension Drawings: inch (mm)

Gearbox Ratio	Dim A	Dim B	Dim C
50:1 to 70:1	15.02" (381.5)	10.69" (271.5)	7.36" (187)
82:1 to 276:1	18.96" (481.5)	12.12" (308)	8.19" (224)

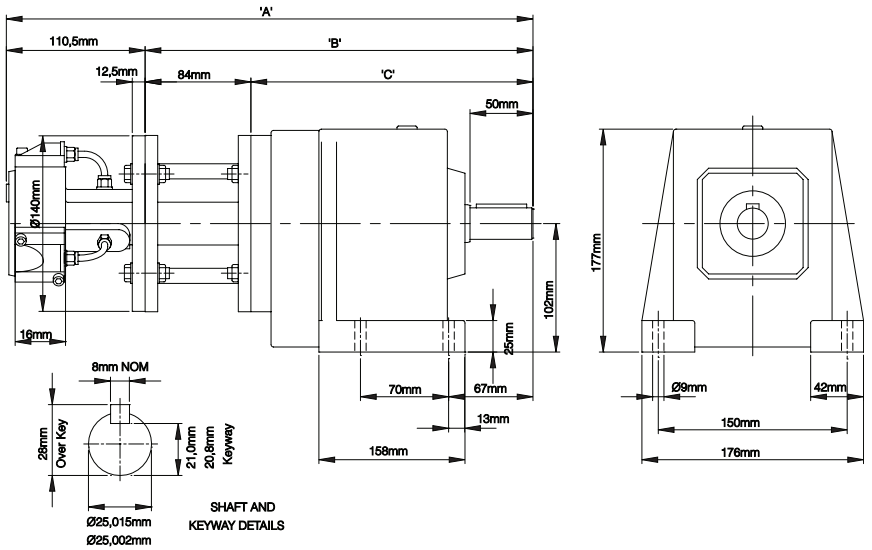

905 Dynatork 3

Dimension Drawings: inch (mm)

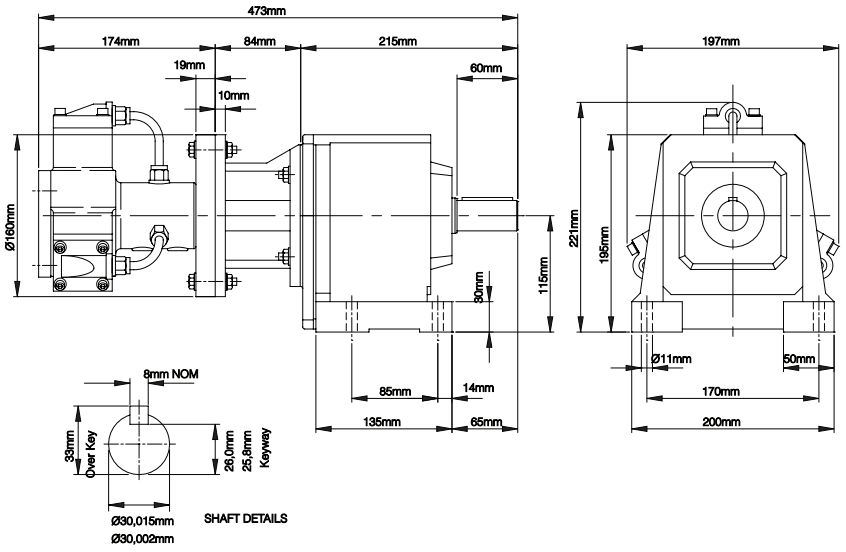

906 Dynatork 3

Dimension Drawings: inch (mm)

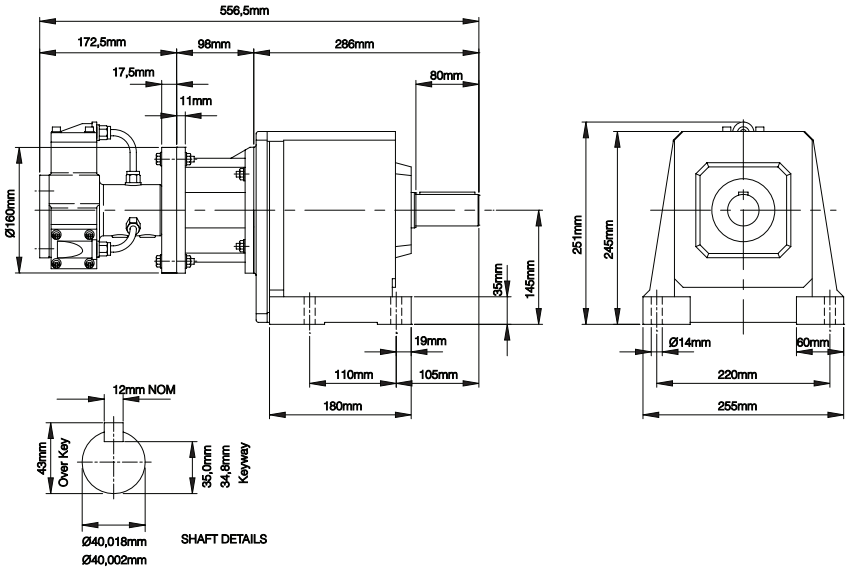

907 Dynatork 7

Dimension Drawings: inch (mm)

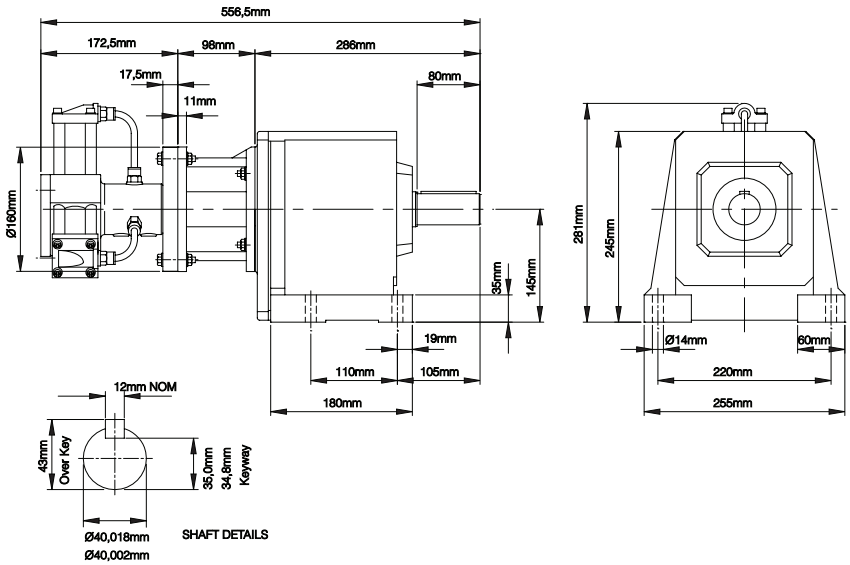

902

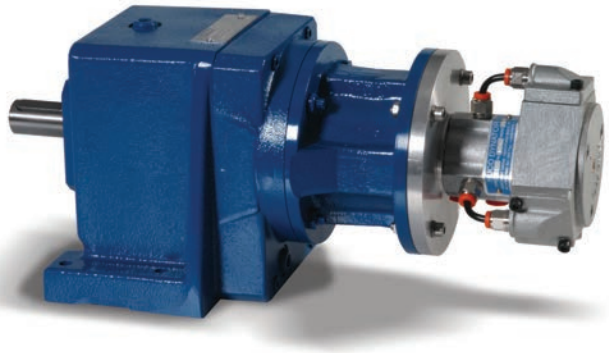

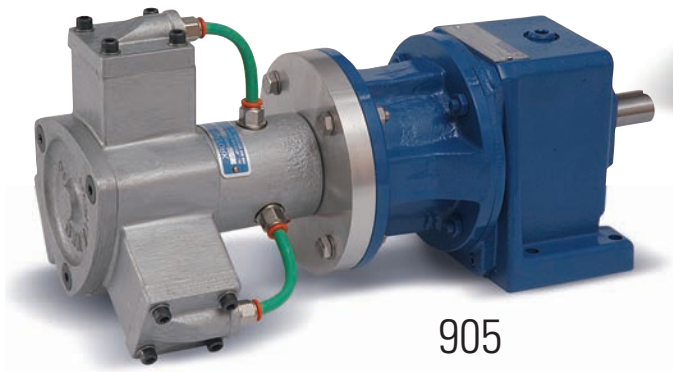

905

Geared Motors | Worm Gearboxes

904 • 914 • 924

Part Number Example 902.15.06

904 · **15** · **09**

Ratio Order Number (see below)

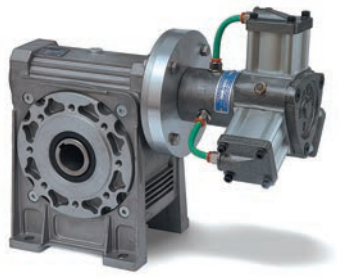

	Hollow Shaft			Single Shaft			Double Shaft		
Motor Size	1	3	7	1	3	7	1	3	7
Lube	904.10	904.30	904.70	914.10	914.30	914.70	924.10	924.30	924.70
Non-Lube	904.15	904.35	904.75	914.15	914.35	914.75	924.10	924.35	924.75

Order as one complete part number. Include (.) in part number.

- **High strength aluminium worm gearboxes**
- **Ratios from 7:1 to 80:1**
- **Output speeds from 1 to 100 rev/min**
- **Maximum continuous output torque up to 400 Nm**

Lube: for use with a lubricated air supply
Non-Lube only: for use with clean, non-lubricated air supply

Key Data

Motor Size	Dynatork 1	Dynatork 3	Dynatork 7
Shaft	19	25	35
Output shaft effective length (mm)	40	60	60
Maximum radial shaft load (N)	131	2.5	2.65
at (L) distance from face (mm)	20	30	30
Max. continuous output torque (Nm)	40	150	400
Weight 1 stage (kg)	4kg	12	40

For Output Torque

1 Locate the motor torque/speed graph on page 6 (size 1) or page 8 (size 3).

2 Multiply the motor torque (at a specific RPM) by the chosen ratio to give the output torque.

3 Verify that output speed and torque meet application requirements.

Speed / Ratio Selection

	Ratio Order Number									
	01	02	03	04	05	06	07	08	09	10
Ratio:1	7	10	15	25	30	40	50	60	80	100
Motor RPM	Planetary Output Speed (RPM)									
700	100	70	47	28	23	17.5	14	11.67	8.75	7
600	86	60	40	24	20	15	12	10	7.5	6
500	71	50	33	20	17	12.5	10	8.33	6.25	5
400	57	40	27	16	13	10	8	6.67	5.00	4
300	43	30	20	12	10	7.5	6	5	3.75	3
200	29	20	13	8	7	5	4	3.33	2.50	2
100	14	10	7	4	3	2.5	2	1.67	1.25	1

904 • 914 • 924 with size 1 motor

Dimension Drawings: inch (mm)

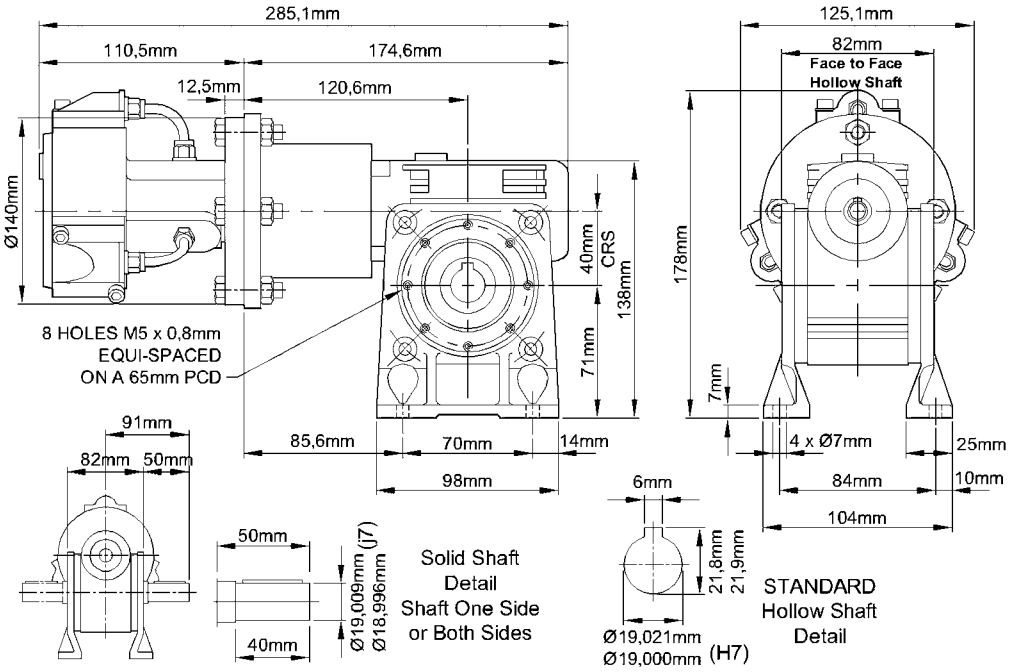

904 • 914 • 924 with size 3 motor

Dimension Drawings: inch (mm)

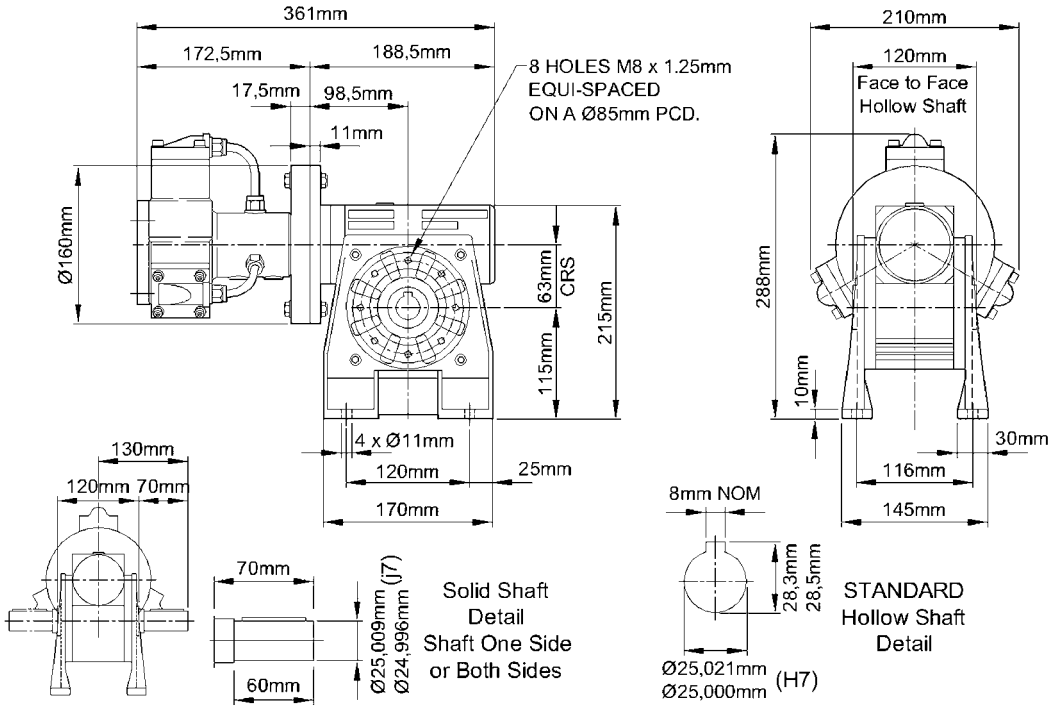

904 • 914 • 924 with size 7 motor

Dimension Drawings: inch (mm)

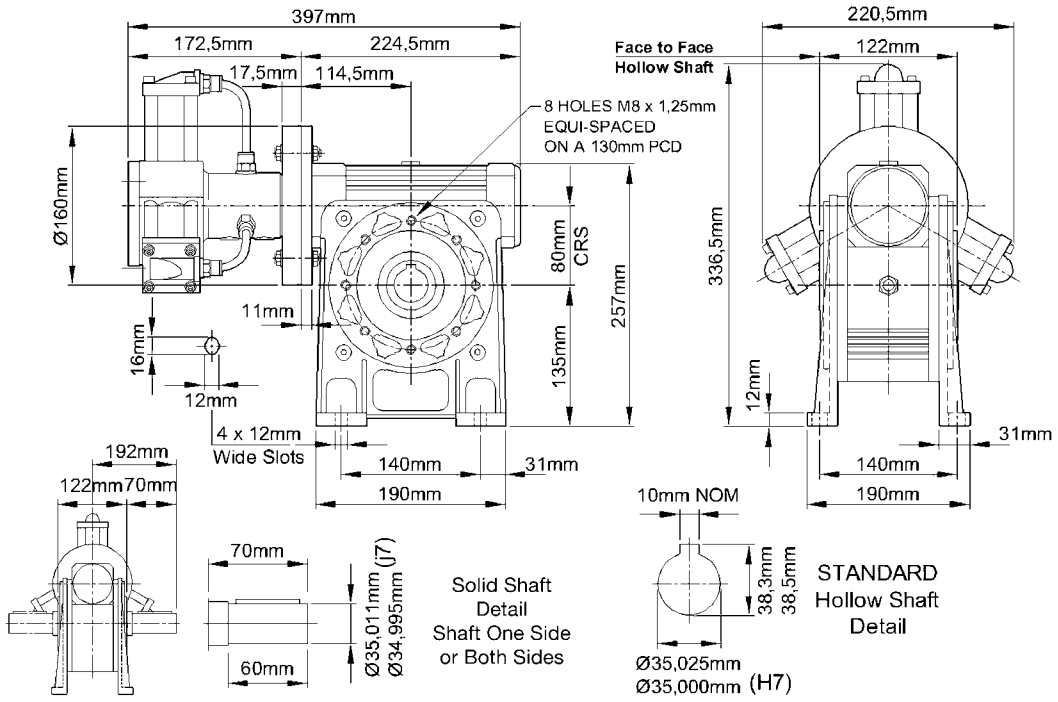

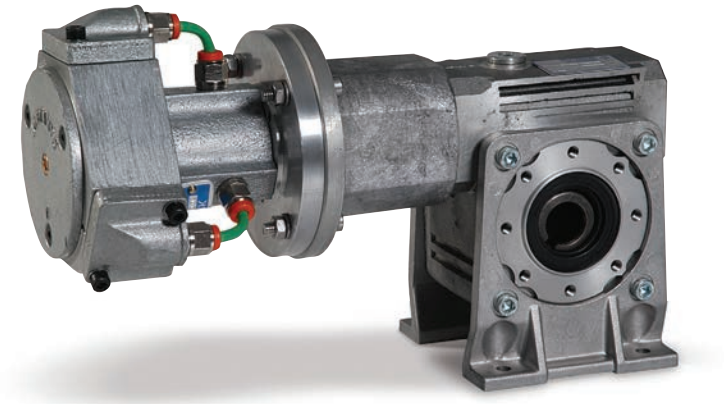

Dynatork Service Kits

The Dynatork Air motor piston is designed for easy maintenance. The life of the motor can be extended almost indefinitely by changing the pistons and seals at regular service intervals. The service kit contains a set of pistons and liners.

Order Codes

Lubricated	Non-Lubricated
909.10	909.15
909.30	909.35
909.70M	909.75M

Note: Due to design change size 7 Dynatork Pistons are now longer, if you have an older unit the new pistons can be fitted except on 900.70.B and 900.75.B types where the older shorter pistons are still available [order codes 909.70 & 909.75].

Fitting procedure

- Remove back flange.
- Remove all three piston caps.
- Push out Pistons and liners and ensure old O ring is removed.
- Check for any debris before fitting new pistons.
- Fit new Liners, Pistons and O rings assembly, ensuring piston slides when fitted.
- Refit Piston Caps.
- Refit Flange plate.
- Test run motor.

Altra Industrial Motion

All Customer Service phone numbers shown in bold

Electromagnetic Clutches and Brakes

Warner Electric

Electromagnetic Clutches and Brakes

New Hartford, CT - USA
1-800-825-6544

For application assistance: 1-800-825-9050

St Barthelemy d'Anjou, France
+33 (0) 2 41 21 24 24

Precision Electric Coils and Electromagnetic Clutches and Brakes

Columbia City, IN - USA
1-260-244-6183

Matrix International

Electromagnetic Clutches and Brakes, Pressure Operated Clutches and Brakes

Brechin, Scotland
+44 (0) 1356 602000

New Hartford, CT - USA
1-800-825-6544

Inertia Dynamics

Spring Set Brakes; Power On and Wrap Spring Clutch/Brakes

New Hartford, CT - USA
1-800-800-6445

Linear Products

Warner Linear

Linear Actuators

Belvidere, IL - USA
1-800-825-6544

For application assistance: 1-800-825-9050

St Barthelemy d'Anjou, France
+33 (0) 2 41 21 24 24

Couplings

Ameridrives Couplings

Mill Spindles, Ameriflex, Ameridisc

Erie, PA - USA
1-814-480-5000

Gear Couplings

San Marcos, TX - USA
1-800-458-0887

Bibby Turboflex

Disc, Gear, Grid Couplings, Overload Clutches

Dewsbury, England
+44 (0) 1924 460801

Boksburg, South Africa
+27 11 918 4270

TB Wood's

Elastomeric Couplings

Chambersburg, PA - USA
1-888-829-6637– Press #5

For application assistance: 1-888-829-6637 – Press #7

General Purpose Disc Couplings

San Marcos, TX - USA
1-888-449-9439

Ameridrives Power Transmission

Universal Joints, Drive Shafts, Mill Gear Couplings

Green Bay, WI - USA
1-920-593-2444

Huco Dynatork

Precision Couplings and Air Motors

Hertford, England
+44 (0) 1992 501900

Chambersburg, PA - USA
1-888-829-6637

Lamiflex Couplings

Flexible Couplings, Bearing Isolators, and Coupling Guards

São Paulo, SP - Brasil
+55-11-5679-6533

Heavy Duty Clutches and Brakes

Wichita Clutch

Pneumatic Clutches and Brakes

Wichita Falls, TX - USA
1-800-964-3262

Bedford, England
+44 (0) 1234 350311

Twiflex Limited

Caliper Brakes and Thrusters

Twickenham, England
+44 (0) 20 8894 1161

Industrial Clutch

Pneumatic and Oil Immersed Clutches and Brakes

Waukesha, WI - USA
1-262-547-3357

Gearing

Boston Gear

Enclosed and Open Gearing, Electrical and Mechanical P.T. Components

Charlotte, NC - USA
1-800-825-6544

For application assistance: 1-800-816-5608

Bauer Gear Motor

Geared Motors

Esslingen, Germany
+49 (711) 3518 0

Somerset, NJ - USA
1-732-469-8770

Nuttall Gear and Delroyd Worm Gear

Worm Gear and Helical Speed Reducers

Niagara Falls, NY - USA
1-716-298-4100

Overrunning Clutches

Formsprag Clutch

Overrunning Clutches and Holdbacks

Warren, MI - USA
1-800-348-0881– Press #1

For application assistance: 1-800-348-0881 – Press #2

Marland Clutch

Roller Ramp and Sprag Type Overrunning Clutches and Backstops

South Beloit, IL - USA
1-800-216-3515

Stieber Clutch

Overrunning Clutches and Holdbacks

Heidelberg, Germany
+49 (0) 6221 30 47 0

Belted Drives and Sheaves

TB Wood's

Belted Drives

Chambersburg, PA - USA
1-888-829-6637 – Press #5

For application assistance: 1-888-829-6637 – Press #7

Engineered Bearing Assemblies

Kilian Manufacturing

Engineered Bearing Assemblies

Syracuse, NY - USA
1-315-432-0700

For information concerning our sales offices in Asia Pacific check our website www.altramotion.com.cn

Huco® Dynatork

www.huco.com

701 Carrier Drive
Charlotte, NC 28216 - USA
704-588-5610
Fax: 704-588-7181

Merchant Drive, Hertford
Hertfordshire, SG13 7BL, England
+44 (0)1992 501900
Fax: +44 (0)1992 500035

P-1700-HD 4/13 Printed in USA